# Hydraulic Cylinders

ADVANCED CYLINDERS

Catalog AC1003

ADVANCED CYLINDERS

Advanced Cylinders, LLC. is an innovative and progressive supplier of highly engineered cylinder solutions and is a manufacturer of a standard range of hydraulic cylinders for industrial applications. We engineer many unique "specials" for very demanding applications over a wide range of Markets and Industry Segments.

Our manufacturing operation is certificated to ISO 9001:2015. Our staff is comprised of people with many years of hydraulic cylinder design and manufacture experience. Our mission is to produce the highest quality and reliable products available in the industrial market place.

Whether you are looking for a NFPA cylinder, or an agricultural cylinder, or a telescopic cylinder, or a custom manufactured cylinder, Advanced Cylinders is your choice for quality products, competitive pricing and a commitment to excellent customer service.

# Table of Contents

## Section A
## Series AG Cylinders

TR Tie Rod Cylinder 2500 PSI Specification ..... 2-5
TR Tie Rod Cylinder 2500 PSI Dimension ..... 6
CW Weld Clevis Cylinder 3000 PSI Specification ..... 7-9
CW Weld Clevis Cylinder 3000 PSI Dimension ..... 10
WT Weld Tube Cylinder 3000 PSI Specification ..... 11-14
WT Weld Tube Cylinder 3000 PSI Dimension ..... 15
SP Snow Plow Cylinder 2500 PSI Specification ..... 16
SP Snow Plow Cylinder 2500 PSI Dimension ..... 17
TH Tie Rod Cylinder 3000 PSI Specification ..... 18-21
TH Tie Rod Cylinder 3000 PSI Dimension ..... 22
WP Weld Hole Cylinder 3000 PSI Specification ..... 23-26
WP Weld Hole Cylinder 3000 PSI Dimension ..... 27

## Section B
## Series TC Cylinders

TC Telescopic Cylinder for Pin and Trunnion Mount ..... 28-31
TCMH Telescopic Cylinder for Trunnion Mount ..... 32-33
TC Telescopic Cylinder for 7 Tons and 12 Tons Inverse ..... 34-35

## Section C
## Series H Cylinders

How to Order ..... 36
1 1/2" - 8" Bore Cylinder Mounting Style ..... 37
Cylinder Mountings (1 1/2" - 8" Bores)
- NFPA MX1/MX3, Tie Rod Extended Both/Head End ..... 38
- NFPA MX2, Tie Rod Extended Cap End ..... 39
- NFPA ME5, Head Rectangular ..... 40
- NFPA ME6, Cap Rectangular ..... 41
- NFPA MF1, Head Rectangular Flange ..... 42
- NFPA MF2, Cap Rectangular Flange ..... 43
- NFPA MF5, Head Square Flange ..... 44
- NFPA MF6, Head Square Flange ..... 45
- NFPA MS2, Side Lugs ..... 46
- NFPA MS3, Center-Line Lugs ..... 47
- NFPA MS4, Side Tapped ..... 48
- NFPA MS7, Eng Lugs ..... 49
- NFPA MT1, Head Trunnion ..... 50
- NFPA MT2, Cap Trunnion ..... 51
- NFPA MT4, Intermediate Trunnion ..... 52
- NFPA MP1, Cap Fixed Clevis ..... 53

10" - 20" Bore Cylinder Mounting Style ..... 54
Cylinder Mountings (10" - 20" Bores)
- NFPA ME5, Head Rectangular (10"~14") ..... 55
- NFPA MF5, Head Square Flange (10"~20") ..... 56
- NFPA ME6, Cap Rectangular (10"~14") ..... 57
- NFPA MF6, Cap Square Flange (10"~20") ..... 58
- NFPA MS2, Side Lugs (10"~14") ..... 59
- NFPA MP1, Cap Fixed Clevis (10"~20") ..... 60
- NFPA MT1, Head Trunnion (10"~14") ..... 61
- NFPA MT2, Cap Trunnion (10"~14") ..... 62
- NFPA MT4, Intermediate Fixed Trunnion (10"~14") ..... 63

Accessories ..... 64-65
Part List and Seal Kits ..... 66

TC Telescopic Cylinder Cross Reference Guide ..... 67-68
Custom Cylinder Order Form ..... 69
Warranty ..... 70

# TR Tie Rod Cylinders

## How to Order

20 06 TR - ORB/NPT

| | |
|---|---|
| 20 | = Bore (inches) |
| 06 | = Stroke (inches) |
| TR | = Tie Rod Cylinder |
| ORB/NPT | = SAE Port and NPT Port |
| | or |
| AORB/NPT | = ASAE, SAE Port and NPT Port |
| | or |
| ORB | = SAE Port |

## Specifications

Bore Sizes - 2" ~ 5"
Strokes - 4 ~ 48"

Pressure - 2500 PSI
Ports - SAE Port and NPT Port

## Features

- GLAND - Ductile Iron with one SAE port and one NPT port on opposite sides
- TUBE - High tensile cold drawn tube, precision honed for extended seal life
- TIE ROD - High tensile steel
- ROD - Hard chrome plated steel
- ROD Clevis - Ductile iron
- END CAP - Ductile iron with two SAE ports and two NPT ports on each side for greater flexibility of assembly
- PISTON - High grade ductile iron
- Use all Hallite type seals
  PISTON SEAL - Hallite 775
  ROD SEAL - Hallite 605
  ROD WIPER - Hallitie 520
  TUBE SEAL - Hallite AS-568 o-ring with anti-extrusion backup ring
- PAINT COLOR - Gloss black, or other customized color

## Available Model Numbers

| MODEL NO | BORE | STROKE | ROD | RETRACTED | EXTENDED | MAX FORCE LB | PORT | PIN | WEIGHT LB |
|---|---|---|---|---|---|---|---|---|---|
| **2008TR-AORB/NPT** | 2" | 8" | 1 1/8" | 20 1/4" | 28 1/4" | 7850 | SAE 8 / 3/8 NPT | 1" | 20 |
| **2508TR-AORB/NPT** | 2 1/2" | 8" | 1 1/8" | 20 1/4" | 28 1/4" | 12270 | SAE 8 / 3/8 NPT | 1" | 23 |
| **3008TR-AORB/NPT** | 3" | 8" | 1 1/4" | 20 1/4" | 28 1/4" | 17670 | SAE 8 / 1/2 NPT | 1" | 29 |
| **3016TR-AORB/NPT** | 3" | 16" | 1 1/4" | 31 1/2" | 47 1/2" | 17670 | SAE 8 / 1/2 NPT | 1 1/4" | 38 |
| **3508TR-AORB/NPT** | 3 1/2" | 8" | 1 1/4" | 20 1/4" | 28 1/4" | 24050 | SAE 8 / 1/2 NPT | 1" | 35 |
| **3516TR-AORB/NPT** | 3 1/2" | 16" | 1 1/2" | 31 1/2" | 47 1/2" | 24050 | SAE 8 / 1/2 NPT | 1 1/4" | 47 |
| **4008TR-AORB/NPT** | 4" | 8" | 1 1/4" | 20 1/4" | 28 1/4" | 31410 | SAE 8 / 1/2 NPT | 1" | 42 |

# Available Model Numbers

| MODEL NO | BORE | STROKE | ROD | RETRACTED | EXTENDED | MAX FORCE LB | PORT | PIN | WEIGHT LB |
|---|---|---|---|---|---|---|---|---|---|
| 4016TR-AORB/NPT | 4" | 16" | 2" | 31 1/2" | 47 1/2" | 31410 | SAE 8 / 1/2 NPT | 1 1/4" | 64 |
| 5008TR-AORB | 5" | 8" | 1 1/2" | 22 1/4" | 30 1/4" | 29450 | SAE 8 | 1" | 66 |
| 5016TR-AORB | 5" | 16" | 2" | 31 1/2" | 47 1/2" | 29450 | SAE 8 | 1 1/4" | 90 |
| 2004TR-ORB/NPT | 2" | 4" | 1 1/8" | 14 1/4" | 18 1/4" | 7850 | SAE 8 / 3/8 NPT | 1" | 15 |
| 2006TR-ORB/NPT | 2" | 6" | 1 1/8" | 16 1/4" | 22 1/4" | 7850 | SAE 8 / 3/8 NPT | 1" | 16 |
| 2008TR-ORB/NPT | 2" | 8" | 1 1/8" | 18 1/4" | 26 1/4" | 7850 | SAE 8 / 3/8 NPT | 1" | 18 |
| 2010TR-ORB/NPT | 2" | 10" | 1 1/8" | 20 1/4" | 30 1/4" | 7850 | SAE 8 / 3/8 NPT | 1" | 21 |
| 2012TR-ORB/NPT | 2" | 12" | 1 1/8" | 22 1/4" | 34 1/4" | 7850 | SAE 8 / 3/8 NPT | 1" | 22 |
| 2014TR-ORB/NPT | 2" | 14" | 1 1/8" | 24 1/4" | 38 1/4" | 7850 | SAE 8 / 3/8 NPT | 1" | 23 |
| 2016TR-ORB/NPT | 2" | 16" | 1 1/8" | 26 1/4" | 42 1/4" | 7850 | SAE 8 / 3/8 NPT | 1" | 25 |
| 2018TR-ORB/NPT | 2" | 18" | 1 1/8" | 28 1/4" | 46 1/4" | 7850 | SAE 8 / 3/8 NPT | 1" | 27 |
| 2020TR-ORB/NPT | 2" | 20" | 1 1/8" | 30 1/4" | 50 1/4" | 7850 | SAE 8 / 3/8 NPT | 1" | 28 |
| 2024TR-ORB/NPT | 2" | 24" | 1 1/8" | 34 1/4" | 58 1/4" | 7850 | SAE 8 / 3/8 NPT | 1" | 30 |
| 2030TR-ORB/NPT | 2" | 30" | 1 1/8" | 40 1/4" | 70 1/4" | 7850 | SAE 8 / 3/8 NPT | 1" | 35 |
| 2036TR-ORB/NPT | 2" | 36" | 1 1/8" | 46 1/4" | 82 1/4" | 7850 | SAE 8 / 3/8 NPT | 1" | 40 |
| 2040TR-ORB/NPT | 2" | 40" | 1 1/8" | 50 1/4" | 90 1/4" | 7850 | SAE 8 / 3/8 NPT | 1" | 44 |
| 2048TR-ORB/NPT | 2" | 48" | 1 1/8" | 58 1/4" | 106 1/4" | 7850 | SAE 8 / 3/8 NPT | 1" | 50 |
| 2504TR-ORB/NPT | 2 1/2" | 4" | 1 1/8" | 14 1/4" | 18 1/4" | 12270 | SAE 8 / 3/8 NPT | 1" | 18 |
| 2506TR-ORB/NPT | 2 1/2" | 6" | 1 1/8" | 16 1/4" | 22 1/4" | 12270 | SAE 8 / 3/8 NPT | 1" | 20 |
| 2508TR-ORB/NPT | 2 1/2" | 8" | 1 1/8" | 18 1/4" | 26 1/4" | 12270 | SAE 8 / 3/8 NPT | 1" | 22 |
| 2510TR-ORB/NPT | 2 1/2" | 10" | 1 1/8" | 20 1/4" | 30 1/4" | 12270 | SAE 8 / 3/8 NPT | 1" | 24 |
| 2512TR-ORB/NPT | 2 1/2" | 12" | 1 1/8" | 22 1/4" | 34 1/4" | 12270 | SAE 8 / 3/8 NPT | 1" | 25 |
| 2514TR-ORB/NPT | 2 1/2" | 14" | 1 1/8" | 24 1/4" | 38 1/4" | 12270 | SAE 8 / 3/8 NPT | 1" | 26 |
| 2516TR-ORB/NPT | 2 1/2" | 16" | 1 1/8" | 26 1/4" | 42 1/4" | 12270 | SAE 8 / 3/8 NPT | 1" | 28 |
| 2518TR-ORB/NPT | 2 1/2" | 18" | 1 1/8" | 28 1/4" | 46 1/4" | 12270 | SAE 8 / 3/8 NPT | 1" | 30 |
| 2520TR-ORB/NPT | 2 1/2" | 20" | 1 1/8" | 30 1/4" | 50 1/4" | 12270 | SAE 8 / 3/8 NPT | 1" | 32 |
| 2524TR-ORB/NPT | 2 1/2" | 24" | 1 1/8" | 34 1/4" | 58 1/4" | 12270 | SAE 8 / 3/8 NPT | 1" | 36 |
| 2530TR-ORB/NPT | 2 1/2" | 30" | 1 1/4" | 40 1/4" | 70 1/4" | 12270 | SAE 8 / 3/8 NPT | 1" | 43 |
| 2536TR-ORB/NPT | 2 1/2" | 36" | 1 1/4" | 46 1/4" | 82 1/4" | 12270 | SAE 8 / 3/8 NPT | 1" | 48 |
| 2540TR-ORB/NPT | 2 1/2" | 40" | 1 1/4" | 50 1/4" | 90 1/4" | 12270 | SAE 8 / 3/8 NPT | 1" | 51 |
| 2548TR-ORB/NPT | 2 1/2" | 48" | 1 1/4" | 58 1/4" | 106 1/4" | 12270 | SAE 8 / 3/8 NPT | 1" | 59 |
| 3004TR-ORB/NPT | 3" | 4" | 1 1/4" | 14 1/4" | 18 1/4" | 17670 | SAE 8 / 1/2 NPT | 1" | 23 |
| 3006TR-ORB/NPT | 3" | 6" | 1 1/4" | 16 1/4" | 22 1/4" | 17670 | SAE 8 / 1/2 NPT | 1" | 24 |
| 3008TR-ORB/NPT | 3" | 8" | 1 1/4" | 18 1/4" | 26 1/4" | 17670 | SAE 8 / 1/2 NPT | 1" | 26 |
| 3010TR-ORB/NPT | 3" | 10" | 1 1/4" | 20 1/4" | 30 1/4" | 17670 | SAE 8 / 1/2 NPT | 1" | 29 |
| 3012TR-ORB/NPT | 3" | 12" | 1 1/4" | 22 1/4" | 34 1/4" | 17670 | SAE 8 / 1/2 NPT | 1" | 32 |
| 3014TR-ORB/NPT | 3" | 14" | 1 1/4" | 24 1/4" | 38 1/4" | 17670 | SAE 8 / 1/2 NPT | 1" | 33 |
| 3016TR-ORB/NPT | 3" | 16" | 1 1/4" | 26 1/4" | 42 1/4" | 17670 | SAE 8 / 1/2 NPT | 1" | 36 |
| 3018TR-ORB/NPT | 3" | 18" | 1 1/4" | 28 1/4" | 46 1/4" | 17670 | SAE 8 / 1/2 NPT | 1" | 38 |
| 3020TR-ORB/NPT | 3" | 20" | 1 1/4" | 30 1/4" | 50 1/4" | 17670 | SAE 8 / 1/2 NPT | 1" | 40 |
| 3024TR-ORB/NPT | 3" | 24" | 1 1/2" | 34 1/4" | 58 1/4" | 17670 | SAE 8 / 1/2 NPT | 1" | 49 |
| 3030TR-ORB/NPT | 3" | 30" | 1 1/2" | 40 1/4" | 70 1/4" | 17670 | SAE 8 / 1/2 NPT | 1" | 56 |
| 3036TR-ORB/NPT | 3" | 36" | 1 1/2" | 46 1/4" | 82 1/4" | 17670 | SAE 8 / 1/2 NPT | 1" | 63 |

# Available Model Numbers

| MODEL NO | BORE | STROKE | ROD | RETRACTED | EXTENDED | MAX FORCE LB | PORT | PIN | WEIGHT LB |
|---|---|---|---|---|---|---|---|---|---|
| 3040TR-ORB/NPT | 3" | 40" | 1 1/2" | 50 1/4" | 90 1/4" | 17670 | SAE 8 / 1/2 NPT | 1" | 67 |
| 3048TR-ORB/NPT | 3" | 48" | 1 1/2" | 58 1/4" | 106 1/4" | 17670 | SAE 8 / 1/2 NPT | 1" | 77 |
| 3504TR-ORB/NPT | 3 1/2" | 4" | 1 1/4" | 14 1/4" | 18 1/4" | 24050 | SAE 8 / 1/2 NPT | 1" | 27 |
| 3506TR-ORB/NPT | 3 1/2" | 6" | 1 1/4" | 16 1/4" | 22 1/4" | 24050 | SAE 8 / 1/2 NPT | 1" | 30 |
| 3508TR-ORB/NPT | 3 1/2" | 8" | 1 1/4" | 18 1/4" | 26 1/4" | 24050 | SAE 8 / 1/2 NPT | 1" | 33 |
| 3510TR-ORB/NPT | 3 1/2" | 10" | 1 1/4" | 20 1/4" | 30 1/4" | 24050 | SAE 8 / 1/2 NPT | 1" | 34 |
| 3512TR-ORB/NPT | 3 1/2" | 12" | 1 1/4" | 22 1/4" | 34 1/4" | 24050 | SAE 8 / 1/2 NPT | 1" | 37 |
| 3514TR-ORB/NPT | 3 1/2" | 14" | 1 1/4" | 24 1/4" | 38 1/4" | 24050 | SAE 8 / 1/2 NPT | 1" | 39 |
| 3516TR-ORB/NPT | 3 1/2" | 16" | 1 1/4" | 26 1/4" | 42 1/4" | 24050 | SAE 8 / 1/2 NPT | 1" | 42 |
| 3518TR-ORB/NPT | 3 1/2" | 18" | 1 1/4" | 28 1/4" | 46 1/4" | 24050 | SAE 8 / 1/2 NPT | 1" | 44 |
| 3520TR-ORB/NPT | 3 1/2" | 20" | 1 1/4" | 30 1/4" | 50 1/4" | 24050 | SAE 8 / 1/2 NPT | 1" | 47 |
| 3524TR-ORB/NPT | 3 1/2" | 24" | 1 1/2" | 34 1/4" | 58 1/4" | 24050 | SAE 8 / 1/2 NPT | 1" | 56 |
| 3530TR-ORB/NPT | 3 1/2" | 30" | 1 1/2" | 40 1/4" | 70 1/4" | 24050 | SAE 8 / 1/2 NPT | 1" | 62 |
| 3536TR-ORB/NPT | 3 1/2" | 36" | 1 1/2" | 46 1/4" | 82 1/4" | 24050 | SAE 8 / 1/2 NPT | 1" | 72 |
| 3540TR-ORB/NPT | 3 1/2" | 40" | 1 1/2" | 50 1/4" | 90 1/4" | 24050 | SAE 8 / 1/2 NPT | 1" | 78 |
| 3548TR-ORB/NPT | 3 1/2" | 48" | 1 1/2" | 58 1/4" | 106 1/4" | 24050 | SAE 8 / 1/2 NPT | 1" | 90 |
| 4004TR-ORB/NPT | 4" | 4" | 1 1/4" | 14 1/4" | 18 1/4" | 31410 | SAE 8 / 1/2 NPT | 1" | 34 |
| 4006TR-ORB/NPT | 4" | 6" | 1 1/4" | 16 1/4" | 22 1/4" | 31410 | SAE 8 / 1/2 NPT | 1" | 36 |
| 4008TR-ORB/NPT | 4" | 8" | 1 1/4" | 18 1/4" | 26 1/4" | 31410 | SAE 8 / 1/2 NPT | 1" | 39 |
| 4010TR-ORB/NPT | 4" | 10" | 1 1/4" | 20 1/4" | 30 1/4" | 31410 | SAE 8 / 1/2 NPT | 1" | 42 |
| 4012TR-ORB/NPT | 4" | 12" | 1 1/4" | 22 1/4" | 34 1/4" | 31410 | SAE 8 / 1/2 NPT | 1" | 45 |
| 4014TR-ORB/NPT | 4" | 14" | 1 1/4" | 24 1/4" | 38 1/4" | 31410 | SAE 8 / 1/2 NPT | 1" | 50 |
| 4016TR-ORB/NPT | 4" | 16" | 1 1/4" | 26 1/4" | 42 1/4" | 31410 | SAE 8 / 1/2 NPT | 1" | 51 |
| 4018TR-ORB/NPT | 4" | 18" | 1 1/2" | 28 1/4" | 46 1/4" | 31410 | SAE 8 / 1/2 NPT | 1" | 56 |
| 4020TR-ORB/NPT | 4" | 20" | 1 1/2" | 30 1/4" | 50 1/4" | 31410 | SAE 8 / 1/2 NPT | 1" | 59 |
| 4024TR-ORB/NPT | 4" | 24" | 2" | 34 1/4" | 58 1/4" | 31410 | SAE 8 / 1/2 NPT | 1" | 74 |
| 4030TR-ORB/NPT | 4" | 30" | 2" | 40 1/4" | 70 1/4" | 31410 | SAE 8 / 1/2 NPT | 1" | 94 |
| 4036TR-ORB/NPT | 4" | 36" | 2" | 46 1/4" | 82 1/4" | 31410 | SAE 8 / 1/2 NPT | 1" | 102 |
| 4040TR-ORB/NPT | 4" | 40" | 2" | 50 1/4" | 90 1/4" | 31410 | SAE 8 / 1/2 NPT | 1" | 106 |
| 4048TR-ORB/NPT | 4" | 48" | 2" | 58 1/4" | 106 1/4" | 31410 | SAE 8 / 1/2 NPT | 1" | 120 |
| 5004TR-ORB | 5" | 4" | 1 1/2" | 16 1/4" | 20 1/4" | 49080 | SAE 8 | 1" | 53 |
| 5006TR-ORB | 5" | 6" | 1 1/2" | 18 1/4" | 24 1/4" | 49080 | SAE 8 | 1" | 55 |
| 5008TR-ORB | 5" | 8" | 1 1/2" | 20 1/4" | 28 1/4" | 49080 | SAE 8 | 1" | 64 |
| 5010TR-ORB | 5" | 10" | 1 1/2" | 22 1/4" | 32 1/4" | 49080 | SAE 8 | 1" | 68 |
| 5012TR-ORB | 5" | 12" | 2" | 24 1/4" | 36 1/4" | 49080 | SAE 8 | 1 1/4" | 77 |
| 5014TR-ORB | 5" | 14" | 2" | 26 1/4" | 40 1/4" | 49080 | SAE 8 | 1 1/4" | 82 |
| 5016TR-ORB | 5" | 16" | 2" | 28 1/4" | 44 1/4" | 49080 | SAE 8 | 1 1/4" | 87 |
| 5018TR-ORB | 5" | 18" | 2" | 30 1/4" | 48 1/4" | 49080 | SAE 8 | 1 1/4" | 92 |
| 5020TR-ORB | 5" | 20" | 2" | 32 1/4" | 52 1/4" | 49080 | SAE 8 | 1 1/4" | 96 |
| 5024TR-ORB | 5" | 24" | 2" | 36 1/4" | 60 1/4" | 49080 | SAE 8 | 1 1/4" | 106 |
| 5030TR-ORB | 5" | 30" | 2" | 42 1/4" | 72 1/4" | 49080 | SAE 8 | 1 1/4" | 121 |
| 5036TR-ORB | 5" | 36" | 2" | 48 1/4" | 84 1/4" | 49080 | SAE 8 | 1 1/4" | 136 |
| 5040TR-ORB | 5" | 40" | 2" | 52 1/4" | 92 1/4" | 49080 | SAE 8 | 1 1/4" | 146 |

# Available Model Numbers

| MODEL NO | BORE | STROKE | ROD | RETRACTED | EXTENDED | MAX FORCE LB | PORT | PIN | WEIGHT LB |
|---|---|---|---|---|---|---|---|---|---|
| **5048TR-ORB** | 5" | 48" | 2" | 60 1/4" | 108 1/4" | 49080 | SAE 8 | 1 1/4" | 166 |
| **SK-TR201125B** | 2" BORE X 1 1/8" ROD SEAL KIT | | | | | | | | |
| **SK-TR251125B** | 2 1/2" BORE X 1 1/8" ROD SEAL KIT | | | | | | | | |
| **SK-TR251250B** | 2 1/2" BORE X 1 1/4" ROD SEAL KIT | | | | | | | | |
| **SK-TR301250B** | 3" BORE X 1 1/4" ROD SEAL KIT | | | | | | | | |
| **SK-TR301500B** | 3" BORE X 1 1/2" ROD SEAL KIT | | | | | | | | |
| **SK-TR351250B** | 3 1/2" BORE X 1 1/4" ROD SEAL KIT | | | | | | | | |
| **SK-TR351500B** | 3 1/2" BORE X 1 1/2" ROD SEAL KIT | | | | | | | | |
| **SK-TR401250B** | 4" BORE X 1 1/4" ROD SEAL KIT | | | | | | | | |
| **SK-TR401500B** | 4" BORE X 1 1/2" ROD SEAL KIT | | | | | | | | |
| **SK-TR402000B** | 4" BORE X 2" ROD SEAL KIT | | | | | | | | |

# TR Tie Rod Cylinders

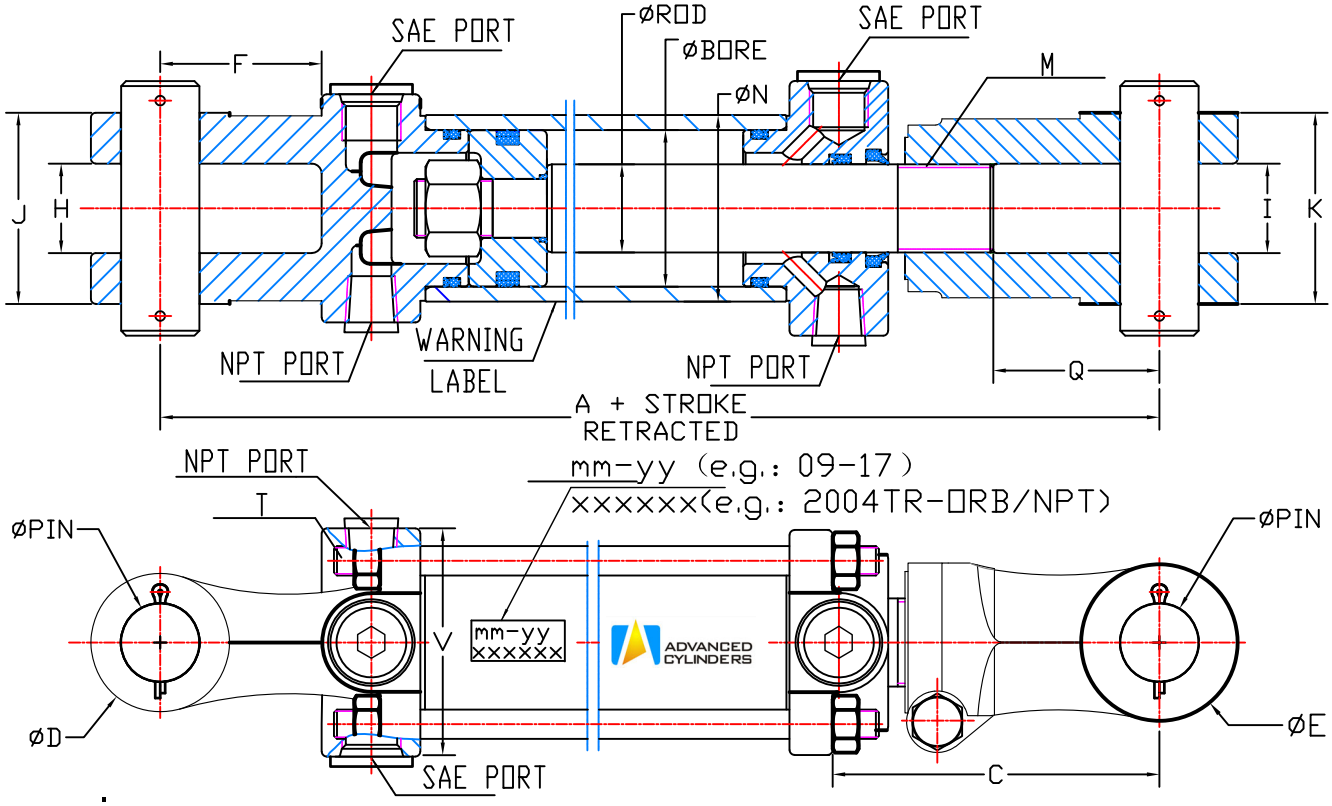


## Dimension

| BORE SIZE | 2" | 2 1/2" | 3" | 3 1/2" | 4" | 5" |
|---|---|---|---|---|---|---|
| A<br>NON-ASAE // ASAE | 10 1/4" // 12 1/4" | 10 1/4" // 12 1/4" | 10 1/4" // 12 1/4"<br>(3016 ASAE 15 1/2") | 10 1/4" // 12 1/4"<br>(3516 ASAE 15 1/2") | 10 1/4" // 12 1/4"<br>(4016 ASAE 15 1/2") | 10 1/4" // 14 1/4"<br>(5016 ASAE 15 1/2") |
| C<br>NON-ASAE // ASAE | 4.17" // 6.17" | 4.17" // 6.17" | 4.07" // 6.07"<br>(3016 ASAE 9.30") | 3.97" // 6.01"<br>(3516 ASAE 9.26") | 3.90" // 5.90"<br>(4016 ASAE 9.10") | 5.01" // 7.01"<br>(5016 ASAE 8.26") |
| D | 1.77" | 1.97" | 2.04" | 2.25" | 2.05" | 2.76" |
| E | 2.00" | 2.00" | 2.04" | 2.25" | 2.05" | 2.76" |
| F | 2.06" | 2.06" | 2.06" | 2.06" | 2.06" | 2.12" |
| H | 1.14" | 1.14" | 1.14" | 1.14" | 1.14" | 1.30" |
| I | 1.14" | 1.14" | 1.14" | 1.14" | 1.14" | 1.20" |
| J | 2.46" | 2.44" | 2.50" | 2.50" | 2.64" | 2.87" |
| K | 2.46" | 2.44" | 2.64" | 2.64" | 2.64" | 2.95" |
| M | 1 1/8-12UNF | 1 1/8-12UNF | 1 1/4-12UNF | 1 1/4-12UNF | 1 1/4-12UNF | 1 1/2-12UNF |
| N | 2.38" | 2.89" | 3.39" | 4.00" | 4.50" | 5.50" |
| Q | 2.12" | 2.12" | 2.12" | 2.12" | 2.12" | 2.12" |
| T | M10 | M10 | M12 | M14 | M16 | M20 |
| V | 2.91" | 3.31" | 3.86" | 4.29" | 5.12" | 6.46" |

# CW Weld Clevis Cylinders

## How to Order

20 06 CW

| | |
|---|---|
| 20 | = Bore (inches) |
| 06 | = Stroke (inches) |
| CW | = Weld Clevis, SAE Port |
| | or |
| CW-NPT | = Weld Clevis, NPT Port |

## Specifications

Bore Sizes - 1 1/2" ~ 5"
Strokes - 4 ~ 36"
Pressure - 3000 PSI
Ports - SAE Port or NPT Port

## Features

- CONSTRUCTION - Heavy duty welded
- TUBE - High tensile cold drawn tube, precision honed for extended seal life
- ROD - Hard chrome plated steel
- PISTON - High grade ductile iron
- Use all Hallite type seals
  - PISTON SEAL - Hallite 775
  - ROD SEAL - Hallite 605
  - ROD WIPER - Hallitie 520
  - TUBE SEAL - Hallite AS-568 o-ring with anti-extrusion backup ring
- PAINT COLOR - Gloss black, or other customized color

## Available Model Numbers

| MODEL NO | BORE | STROKE | ROD | RETRACTED | EXTENDED | MAX FORCE LB | PORT | PIN | WEIGHT LB |
|---|---|---|---|---|---|---|---|---|---|
| **1504CW-NPT** | 1 1/2" | 4" | 1" | 11 3/4" | 15 3/4" | 5300 | 3/8 NPT | 1/2" | 8 |
| **1506CW-NPT** | 1 1/2" | 6" | 1" | 13 3/4" | 19 3/4" | 5300 | 3/8 NPT | 1/2" | 9 |
| **1508CW-NPT** | 1 1/2" | 8" | 1" | 15 3/4" | 23 3/4" | 5300 | 3/8 NPT | 1/2" | 10 |
| **1510CW-NPT** | 1 1/2" | 10" | 1" | 17 3/4" | 27 3/4" | 5300 | 3/8 NPT | 1/2" | 11 |
| **1512CW-NPT** | 1 1/2" | 12" | 1" | 19 3/4" | 31 3/4" | 5300 | 3/8 NPT | 1/2" | 12 |
| **2004CW** | 2" | 4" | 1 1/4" | 14 1/4" | 18 1/4" | 9420 | SAE 6 | 1" | 14 |
| **2006CW** | 2" | 6" | 1 1/4" | 16 1/4" | 22 1/4" | 9420 | SAE 6 | 1" | 16 |
| **2008CW** | 2" | 8" | 1 1/4" | 18 1/4" | 26 1/4" | 9420 | SAE 6 | 1" | 17 |
| **2010CW** | 2" | 10" | 1 1/4" | 20 1/4" | 30 1/4" | 9420 | SAE 6 | 1" | 20 |
| **2012CW** | 2" | 12" | 1 1/4" | 22 1/4" | 34 1/4" | 9420 | SAE 6 | 1" | 21 |
| **2014CW** | 2" | 14" | 1 1/4" | 24 1/4" | 38 1/4" | 9420 | SAE 6 | 1" | 23 |
| **2016CW** | 2" | 16" | 1 1/4" | 26 1/4" | 42 1/4" | 9420 | SAE 6 | 1" | 24 |
| **2018CW** | 2" | 18" | 1 1/4" | 28 1/4" | 46 1/4" | 9420 | SAE 6 | 1" | 26 |

# Available Model Numbers

| MODEL NO | BORE | STROKE | ROD | RETRACTED | EXTENDED | MAX FORCE LB | PORT | PIN | WEIGHT LB |
|---|---|---|---|---|---|---|---|---|---|
| **2020CW** | 2" | 20" | 1 1/4" | 30 1/4" | 50 1/4" | 9420 | SAE 6 | 1" | 28 |
| **2024CW** | 2" | 24" | 1 1/4" | 34 1/4" | 58 1/4" | 9420 | SAE 6 | 1" | 32 |
| **2028CW** | 2" | 28" | 1 1/4" | 38 1/4" | 66 1/4" | 9420 | SAE 6 | 1" | 36 |
| **2030CW** | 2" | 30" | 1 1/4" | 40 1/4" | 70 1/4" | 9420 | SAE 6 | 1" | 37 |
| **2032CW** | 2" | 32" | 1 1/4" | 42 1/4" | 74 1/4" | 9420 | SAE 6 | 1" | 39 |
| **2034CW** | 2" | 34" | 1 1/4" | 44 1/4" | 78 1/4" | 9420 | SAE 6 | 1" | 40 |
| **2036CW** | 2" | 36" | 1 1/4" | 46 1/4" | 82 1/4" | 9420 | SAE 6 | 1" | 41 |
| **2504CW** | 2 1/2" | 4" | 1 1/2" | 14 1/4" | 18 1/4" | 14720 | SAE 8 | 1" | 19 |
| **2506CW** | 2 1/2" | 6" | 1 1/2" | 16 1/4" | 22 1/4" | 14720 | SAE 8 | 1" | 21 |
| **2508CW** | 2 1/2" | 8" | 1 1/2" | 18 1/4" | 26 1/4" | 14720 | SAE 8 | 1" | 23 |
| **2510CW** | 2 1/2" | 10" | 1 1/2" | 20 1/4" | 30 1/4" | 14720 | SAE 8 | 1" | 25 |
| **2512CW** | 2 1/2" | 12" | 1 1/2" | 22 1/4" | 34 1/4" | 14720 | SAE 8 | 1" | 27 |
| **2514CW** | 2 1/2" | 14" | 1 1/2" | 24 1/4" | 38 1/4" | 14720 | SAE 8 | 1" | 29 |
| **2516CW** | 2 1/2" | 16" | 1 1/2" | 26 1/4" | 42 1/4" | 14720 | SAE 8 | 1" | 31 |
| **2518CW** | 2 1/2" | 18" | 1 1/2" | 28 1/4" | 46 1/4" | 14720 | SAE 8 | 1" | 34 |
| **2520CW** | 2 1/2" | 20" | 1 1/2" | 30 1/4" | 50 1/4" | 14720 | SAE 8 | 1" | 36 |
| **2524CW** | 2 1/2" | 24" | 1 1/2" | 34 1/4" | 58 1/4" | 14720 | SAE 8 | 1" | 40 |
| **2528CW** | 2 1/2" | 28" | 1 1/2" | 38 1/4" | 66 1/4" | 14720 | SAE 8 | 1" | 46 |
| **2530CW** | 2 1/2" | 30" | 1 1/2" | 40 1/4" | 70 1/4" | 14720 | SAE 8 | 1" | 48 |
| **2532CW** | 2 1/2" | 32" | 1 1/2" | 42 1/4" | 74 1/4" | 14720 | SAE 8 | 1" | 50 |
| **2534CW** | 2 1/2" | 34" | 1 1/2" | 44 1/4" | 78 1/4" | 14720 | SAE 8 | 1" | 52 |
| **2536CW** | 2 1/2" | 36" | 1 1/2" | 46 1/4" | 82 1/4" | 14720 | SAE 8 | 1" | 54 |
| **3004CW** | 3" | 4" | 1 1/2" | 14 1/4" | 18 1/4" | 21200 | SAE 8 | 1" | 22 |
| **3006CW** | 3" | 6" | 1 1/2" | 16 1/4" | 22 1/4" | 21200 | SAE 8 | 1" | 24 |
| **3008CW** | 3" | 8" | 1 1/2" | 18 1/4" | 26 1/4" | 21200 | SAE 8 | 1" | 26 |
| **3010CW** | 3" | 10" | 1 1/2" | 20 1/4" | 30 1/4" | 21200 | SAE 8 | 1" | 29 |
| **3012CW** | 3" | 12" | 1 1/2" | 22 1/4" | 34 1/4" | 21200 | SAE 8 | 1" | 31 |
| **3014CW** | 3" | 14" | 1 1/2" | 24 1/4" | 38 1/4" | 21200 | SAE 8 | 1" | 34 |
| **3016CW** | 3" | 16" | 1 1/2" | 26 1/4" | 42 1/4" | 21200 | SAE 8 | 1" | 36 |
| **3018CW** | 3" | 18" | 1 1/2" | 28 1/4" | 46 1/4" | 21200 | SAE 8 | 1" | 38 |
| **3020CW** | 3" | 20" | 1 1/2" | 30 1/4" | 50 1/4" | 21200 | SAE 8 | 1" | 41 |
| **3024CW** | 3" | 24" | 1 1/2" | 34 1/4" | 58 1/4" | 21200 | SAE 8 | 1" | 46 |
| **3028CW** | 3" | 28" | 1 1/2" | 38 1/4" | 66 1/4" | 21200 | SAE 8 | 1" | 51 |
| **3030CW** | 3" | 30" | 1 1/2" | 40 1/4" | 70 1/4" | 21200 | SAE 8 | 1" | 53 |
| **3032CW** | 3" | 32" | 1 1/2" | 42 1/4" | 74 1/4" | 21200 | SAE 8 | 1" | 56 |
| **3034CW** | 3" | 34" | 1 1/2" | 44 1/4" | 78 1/4" | 21200 | SAE 8 | 1" | 58 |
| **3036CW** | 3" | 36" | 1 1/2" | 46 1/4" | 82 1/4" | 21200 | SAE 8 | 1" | 61 |
| **3504CW** | 3 1/2" | 4" | 1 3/4" | 14 1/4" | 18 1/4" | 28860 | SAE 8 | 1" | 28 |
| **3506CW** | 3 1/2" | 6" | 1 3/4" | 16 1/4" | 22 1/4" | 28860 | SAE 8 | 1" | 31 |
| **3508CW** | 3 1/2" | 8" | 1 3/4" | 18 1/4" | 26 1/4" | 28860 | SAE 8 | 1" | 34 |
| **3510CW** | 3 1/2" | 10" | 1 3/4" | 20 1/4" | 30 1/4" | 28860 | SAE 8 | 1" | 36 |
| **3512CW** | 3 1/2" | 12" | 1 3/4" | 22 1/4" | 34 1/4" | 28860 | SAE 8 | 1" | 39 |
| **3514CW** | 3 1/2" | 14" | 1 3/4" | 24 1/4" | 38 1/4" | 28860 | SAE 8 | 1" | 42 |

# Available Model Numbers

| MODEL NO | BORE | STROKE | ROD | RETRACTED | EXTENDED | MAX FORCE LB | PORT | PIN | WEIGHT LB |
|---|---|---|---|---|---|---|---|---|---|
| 3516CW | 3 1/2" | 16" | 1 3/4" | 26 1/4" | 42 1/4" | 28860 | SAE 8 | 1" | 45 |
| 3518CW | 3 1/2" | 18" | 1 3/4" | 28 1/4" | 48 1/4" | 28860 | SAE 8 | 1" | 50 |
| 3520CW | 3 1/2" | 20" | 1 3/4" | 30 1/4" | 50 1/4" | 28860 | SAE 8 | 1" | 54 |
| 3524CW | 3 1/2" | 24" | 1 3/4" | 34 1/4" | 58 1/4" | 28860 | SAE 8 | 1" | 58 |
| 3528CW | 3 1/2" | 28" | 1 3/4" | 38 1/4" | 66 1/4" | 28860 | SAE 8 | 1" | 63 |
| 3530CW | 3 1/2" | 30" | 1 3/4" | 40 1/4" | 70 1/4" | 28860 | SAE 8 | 1" | 67 |
| 3532CW | 3 1/2" | 32" | 1 3/4" | 42 1/4" | 74 1/4" | 28860 | SAE 8 | 1" | 71 |
| 3534CW | 3 1/2" | 34" | 1 3/4" | 44 1/4" | 78 1/4" | 28860 | SAE 8 | 1" | 74 |
| 3536CW | 3 1/2" | 36" | 1 3/4" | 46 1/4" | 82 1/4" | 28860 | SAE 8 | 1" | 76 |
| 4004CW | 4" | 4" | 2" | 14 1/4" | 18 1/4" | 37700 | SAE 8 | 1" | 34 |
| 4006CW | 4" | 6" | 2" | 16 1/4" | 20 1/4" | 37700 | SAE 8 | 1" | 38 |
| 4008CW | 4" | 8" | 2" | 18 1/4" | 26 1/4" | 37700 | SAE 8 | 1" | 40 |
| 4010CW | 4" | 10" | 2" | 20 1/4" | 30 1/4" | 37700 | SAE 8 | 1" | 44 |
| 4012CW | 4" | 12" | 2" | 22 1/4" | 34 1/4" | 37700 | SAE 8 | 1" | 46 |
| 4014CW | 4" | 14" | 2" | 24 1/4" | 38 1/4" | 37700 | SAE 8 | 1" | 51 |
| 4016CW | 4" | 16" | 2" | 26 1/4" | 42 1/4" | 37700 | SAE 8 | 1" | 55 |
| 4018CW | 4" | 18" | 2" | 28 1/4" | 46 1/4" | 37700 | SAE 8 | 1" | 59 |
| 4020CW | 4" | 20" | 2" | 30 1/4" | 50 1/4" | 37700 | SAE 8 | 1" | 62 |
| 4024CW | 4" | 24" | 2" | 34 1/4" | 58 1/4" | 37700 | SAE 8 | 1" | 69 |
| 4030CW | 4" | 30" | 2" | 40 1/4" | 70 1/4" | 37700 | SAE 8 | 1" | 81 |
| 4032CW | 4" | 32" | 2" | 42 1/4" | 74 1/4" | 37700 | SAE 8 | 1" | 85 |
| 4034CW | 4" | 34" | 2" | 44 1/4" | 78 1/4" | 37700 | SAE 8 | 1" | 89 |
| 4036CW | 4" | 36" | 2" | 46 1/4" | 82 1/4" | 37700 | SAE 8 | 1" | 92 |
| 5004CW | 5" | 4" | 2 1/2" | 16 1/4" | 20 1/4" | 58900 | SAE 8 | 1" | 64 |
| 5006CW | 5" | 6" | 2 1/2" | 18 1/4" | 24 1/4" | 58900 | SAE 8 | 1" | 69 |
| 5008CW | 5" | 8" | 2 1/2" | 20 1/4" | 28 1/4" | 58900 | SAE 8 | 1" | 74 |
| 5010CW | 5" | 10" | 2 1/2" | 22 1/4" | 32 1/4" | 58900 | SAE 8 | 1" | 79 |
| 5012CW | 5" | 12" | 2 1/2" | 24 1/4" | 36 1/4" | 58900 | SAE 8 | 1" | 84 |
| 5014CW | 5" | 14" | 2 1/2" | 26 1/4" | 40 1/4" | 58900 | SAE 8 | 1" | 89 |
| 5016CW | 5" | 16" | 2 1/2" | 28 1/4" | 44 1/4" | 58900 | SAE 8 | 1" | 95 |
| 5018CW | 5" | 18" | 2 1/2" | 30 1/4" | 48 1/4" | 58900 | SAE 8 | 1" | 100 |
| 5020CW | 5" | 20" | 2 1/2" | 32 1/4" | 52 1/4" | 58900 | SAE 8 | 1" | 105 |
| 5024CW | 5" | 24" | 2 1/2" | 36 1/4" | 60 1/4" | 58900 | SAE 8 | 1" | 115 |
| 5030CW | 5" | 30" | 2 1/2" | 42 1/4" | 72 1/4" | 58900 | SAE 8 | 1" | 130 |
| 5032CW | 5" | 32" | 2 1/2" | 44 1/4" | 76 1/4" | 58900 | SAE 8 | 1" | 136 |
| 5034CW | 5" | 34" | 2 1/2" | 46 1/4" | 80 1/4" | 58900 | SAE 8 | 1" | 141 |
| 5036CW | 5" | 36" | 2 1/2" | 48 1/4" | 84 1/4" | 58900 | SAE 8 | 1" | 146 |
| SK-CW151000B | 1 1/2" BORE X 1" ROD SEAL KIT | | | | | | | | |
| SK-CW201250B | 2" BORE X 1 1/4" ROD SEAL KIT | | | | | | | | |
| SK-CW251500B | 2 1/2" BORE X 1 1/2" ROD SEAL KIT | | | | | | | | |
| SK-CW301500B | 3" BORE X 1 1/2" ROD SEAL KIT | | | | | | | | |
| SK-CW351750B | 3 1/2" BORE X 1 3/4" ROD SEAL KIT | | | | | | | | |
| SK-CW402000B | 4" BORE X 2" ROD SEAL KIT | | | | | | | | |

# CW Weld Clevis Cylinders

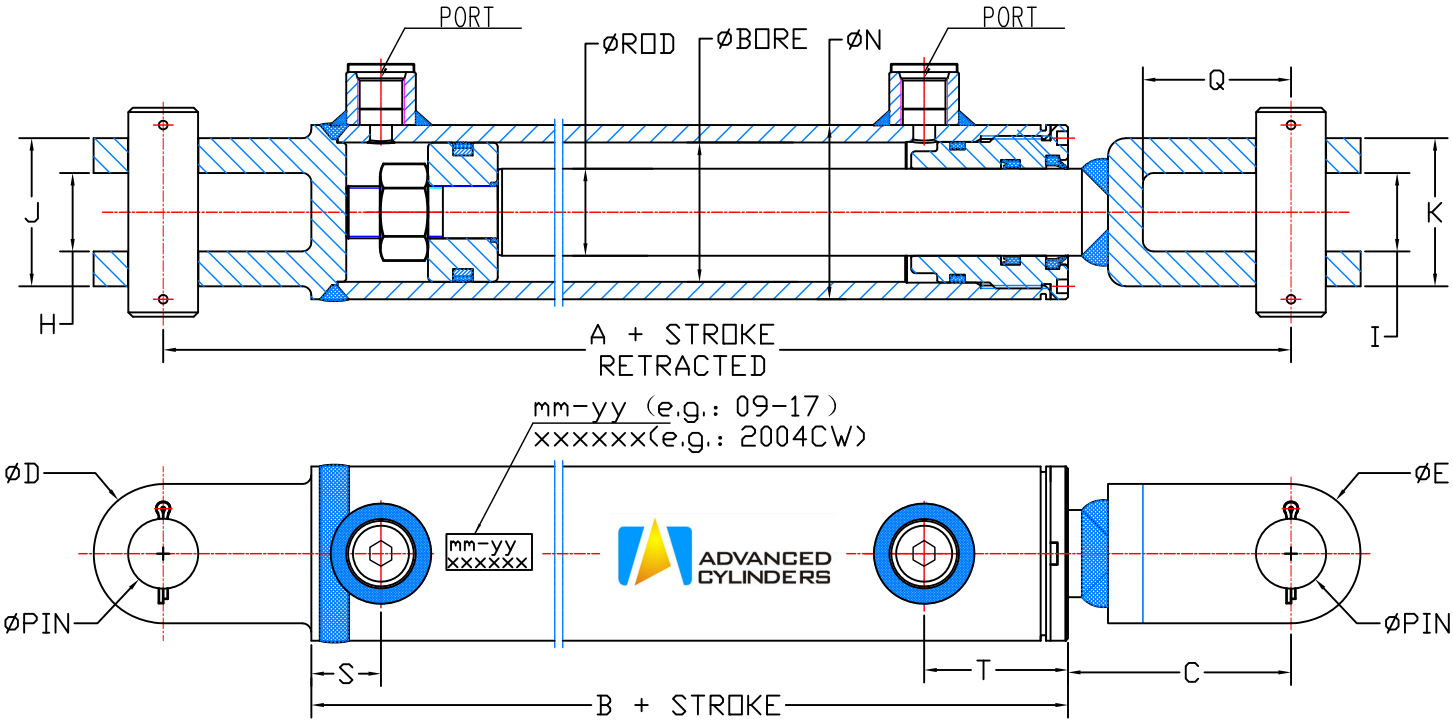


## Dimension

| BORE | 1 1/2" | 2" | 2 1/2" | 3" | 3 1/2" | 4" | 5" |
|---|---|---|---|---|---|---|---|
| A | 7.75" | 10.25" | 10.25" | 10.25" | 10.25" | 10.25" | 12.25" |
| B | 4.28" | 4.92" | 4.92" | 4.92" | 5.05" | 5.30" | 6.19" |
| C | 2.09" | 3.20" | 3.20" | 3.20" | 3.20" | 3.20" | 3.81" |
| D | 1.50" | 2.00" | 2.00" | 2.00" | 2.00" | 2.00" | 3.00" |
| E | 1.50" | 2.00" | 2.00" | 2.00" | 2.00" | 2.00" | 3.00" |
| H | 0.87" | 1.13" | 1.13" | 1.13" | 1.13" | 1.13" | 1.63" |
| I | 0.87" | 1.13" | 1.13" | 1.13" | 1.13" | 1.13" | 1.63" |
| J | 1.63" | 2.13" | 2.13" | 2.13" | 2.37" | 2.37" | 3.13" |
| K | 1.63" | 2.13" | 2.13" | 2.13" | 2.37" | 2.37" | 3.13" |
| N | 2.00" | 2.50" | 3.00" | 3.50" | 4.00" | 4.50" | 5.50" |
| Q | 1.38" | 2.13" | 2.13" | 2.13" | 2.13" | 2.00" | 2.25" |
| S | 1.00" | 1.00" | 1.00" | 1.00" | 1.25" | 1.13" | 1.37" |
| T | 1.88" | 2.06" | 2.19" | 2.19" | 2.19" | 2.19" | 2.75" |

# WT Weld Tube Cylinders

## How to Order

20 06 WT

20 = Bore (inches)
06 = Stroke (inches)
WT = Weld Tube, SAE Port

## Specifications

Bore Sizes - 1 1/2" ~ 5"
Strokes - 4 ~ 48"

Pressure - 3000 PSI
Ports - SAE Port

## Features

- CONSTRUCTION - Heavy duty welded
- TUBE - High tensile cold drawn tube, precision honed for extended seal life
- ROD - Hard chrome plated steel
- PISTON - High grade ductile iron
- Use all Hallite type seals
  PISTON SEAL - Hallite 775
  ROD SEAL - Hallite 605
  ROD WIPER - Hallitie 520
  TUBE SEAL - Hallite AS-568 o-ring with anti-extrusion backup ring
- PAINT COLOR - Gloss black, or other customized color

## Available Model Numbers

| MODEL NO | BORE | STROKE | ROD | RETRACTED | EXTENDED | MAX FORCE LB | PORT | PIN | WEIGHT LB |
|---|---|---|---|---|---|---|---|---|---|
| **1504WT** | 1 1/2" | 4" | 1" | 12" | 16" | 5300 | SAE 4 | 3/4" | 7 |
| **1506WT** | 1 1/2" | 6" | 1" | 14" | 20" | 5300 | SAE 4 | 3/4" | 8 |
| **1508WT** | 1 1/2" | 8" | 1" | 16" | 24" | 5300 | SAE 4 | 3/4" | 9 |
| **1510WT** | 1 1/2" | 10" | 1" | 18" | 28" | 5300 | SAE 4 | 3/4" | 10 |
| **1512WT** | 1 1/2" | 12" | 1" | 20" | 32" | 5300 | SAE 4 | 3/4" | 11 |
| **1514WT** | 1 1/2" | 14" | 1" | 22" | 36" | 5300 | SAE 4 | 3/4" | 12 |
| **1516WT** | 1 1/2" | 16" | 1" | 24" | 40" | 5300 | SAE 4 | 3/4" | 13 |
| **2004WT** | 2" | 4" | 1 1/4" | 12" | 16" | 9420 | SAE 6 | 1" | 12 |
| **2006WT** | 2" | 6" | 1 1/4" | 14" | 20" | 9420 | SAE 6 | 1" | 13 |
| **2008WT** | 2" | 8" | 1 1/4" | 16" | 24" | 9420 | SAE 6 | 1" | 14 |
| **2010WT** | 2" | 10" | 1 1/4" | 18" | 28" | 9420 | SAE 6 | 1" | 16 |

# Available Model Numbers

| MODEL NO | BORE | STROKE | ROD | RETRACTED | EXTENDED | MAX FORCE LB | PORT | PIN | WEIGHT LB |
|---|---|---|---|---|---|---|---|---|---|
| 2012WT | 2" | 12" | 1 1/4" | 20" | 32" | 9420 | SAE 6 | 1" | 18 |
| 2014WT | 2" | 14" | 1 1/4" | 22" | 36" | 9420 | SAE 6 | 1" | 20 |
| 2016WT | 2" | 16" | 1 1/4" | 24" | 40" | 9420 | SAE 6 | 1" | 22 |
| 2018WT | 2" | 18" | 1 1/4" | 26" | 44" | 9420 | SAE 6 | 1" | 23 |
| 2020WT | 2" | 20" | 1 1/4" | 28" | 48" | 9420 | SAE 6 | 1" | 25 |
| 2024WT | 2" | 24" | 1 1/4" | 32" | 56" | 9420 | SAE 6 | 1" | 28 |
| 2028WT | 2" | 28" | 1 1/4" | 36" | 64" | 9420 | SAE 6 | 1" | 32 |
| 2030WT | 2" | 30" | 1 1/4" | 38" | 68" | 9420 | SAE 6 | 1" | 34 |
| 2032WT | 2" | 32" | 1 1/4" | 40" | 72" | 9420 | SAE 6 | 1" | 36 |
| 2036WT | 2" | 36" | 1 1/4" | 44" | 80" | 9420 | SAE 6 | 1" | 37 |
| 2040WT | 2" | 40" | 1 1/4" | 48" | 88" | 9420 | SAE 6 | 1" | 41 |
| 2504WT | 2 1/2" | 4" | 1 1/2" | 12" | 16" | 14720 | SAE 8 | 1" | 16 |
| 2506WT | 2 1/2" | 6" | 1 1/2" | 14" | 20" | 14720 | SAE 8 | 1" | 18 |
| 2508WT | 2 1/2" | 8" | 1 1/2" | 16" | 24" | 14720 | SAE 8 | 1" | 20 |
| 2510WT | 2 1/2" | 10" | 1 1/2" | 18" | 28" | 14720 | SAE 8 | 1" | 22 |
| 2512WT | 2 1/2" | 12" | 1 1/2" | 20" | 32" | 14720 | SAE 8 | 1" | 25 |
| 2514WT | 2 1/2" | 14" | 1 1/2" | 22" | 36" | 14720 | SAE 8 | 1" | 27 |
| 2516WT | 2 1/2" | 16" | 1 1/2" | 24" | 40" | 14720 | SAE 8 | 1" | 29 |
| 2518WT | 2 1/2" | 18" | 1 1/2" | 26" | 44" | 14720 | SAE 8 | 1" | 31 |
| 2520WT | 2 1/2" | 20" | 1 1/2" | 28" | 48" | 14720 | SAE 8 | 1" | 34 |
| 2524WT | 2 1/2" | 24" | 1 1/2" | 32" | 56" | 14720 | SAE 8 | 1" | 38 |
| 2528WT | 2 1/2" | 28" | 1 1/2" | 36" | 64" | 14720 | SAE 8 | 1" | 42 |
| 2530WT | 2 1/2" | 30" | 1 1/2" | 38" | 68" | 14720 | SAE 8 | 1" | 45 |
| 2532WT | 2 1/2" | 32" | 1 1/2" | 40" | 72" | 14720 | SAE 8 | 1" | 47 |
| 2534WT | 2 1/2" | 34" | 1 1/2" | 42" | 76" | 14720 | SAE 8 | 1" | 49 |
| 2536WT | 2 1/2" | 36" | 1 1/2" | 44" | 80" | 14720 | SAE 8 | 1" | 51 |
| 2540WT | 2 1/2" | 40" | 1 1/2" | 48" | 88" | 14720 | SAE 8 | 1" | 57 |
| 3004WT | 3" | 4" | 1 1/2" | 12" | 16" | 21200 | SAE 8 | 1" | 19 |
| 3006WT | 3" | 6" | 1 1/2" | 14" | 20" | 21200 | SAE 8 | 1" | 22 |
| 3008WT | 3" | 8" | 1 1/2" | 16" | 24" | 21200 | SAE 8 | 1" | 24 |
| 3010WT | 3" | 10" | 1 1/2" | 18" | 28" | 21200 | SAE 8 | 1" | 26 |
| 3012WT | 3" | 12" | 1 1/2" | 20" | 32" | 21200 | SAE 8 | 1" | 29 |
| 3014WT | 3" | 14" | 1 1/2" | 22" | 36" | 21200 | SAE 8 | 1" | 31 |
| 3016WT | 3" | 16" | 1 1/2" | 24" | 40" | 21200 | SAE 8 | 1" | 34 |
| 3018WT | 3" | 18" | 1 1/2" | 26" | 44" | 21200 | SAE 8 | 1" | 36 |
| 3020WT | 3" | 20" | 1 1/2" | 28" | 48" | 21200 | SAE 8 | 1" | 38 |
| 3024WT | 3" | 24" | 1 1/2" | 32" | 56" | 21200 | SAE 8 | 1" | 44 |
| 3028WT | 3" | 28" | 1 1/2" | 36" | 64" | 21200 | SAE 8 | 1" | 49 |
| 3030WT | 3" | 30" | 1 1/2" | 38" | 68" | 21200 | SAE 8 | 1" | 51 |
| 3032WT | 3" | 32" | 1 1/2" | 40" | 72" | 21200 | SAE 8 | 1" | 54 |
| 3034WT | 3" | 34" | 1 1/2" | 42" | 76" | 21200 | SAE 8 | 1" | 56 |
| 3036WT | 3" | 36" | 1 1/2" | 44" | 80" | 21200 | SAE 8 | 1" | 59 |
| 3040WT | 3" | 40" | 1 1/2" | 48" | 88" | 21200 | SAE 8 | 1" | 63 |

# Available Model Numbers

| MODEL NO | BORE | STROKE | ROD | RETRACTED | EXTENDED | MAX FORCE LB | PORT | PIN | WEIGHT LB |
|---|---|---|---|---|---|---|---|---|---|
| **3504WT** | 3 1/2" | 4" | 1 3/4" | 14" | 18" | 28860 | SAE 8 | 1 1/4" | 28 |
| **3506WT** | 3 1/2" | 6" | 1 3/4" | 16" | 22" | 28860 | SAE 8 | 1 1/4" | 30 |
| **3508WT** | 3 1/2" | 8" | 1 3/4" | 18" | 26" | 28860 | SAE 8 | 1 1/4" | 33 |
| **3510WT** | 3 1/2" | 10" | 1 3/4" | 20" | 30" | 28860 | SAE 8 | 1 1/4" | 36 |
| **3512WT** | 3 1/2" | 12" | 1 3/4" | 22" | 34" | 28860 | SAE 8 | 1 1/4" | 40 |
| **3514WT** | 3 1/2" | 14" | 1 3/4" | 24" | 38" | 28860 | SAE 8 | 1 1/4" | 42 |
| **3516WT** | 3 1/2" | 16" | 1 3/4" | 26" | 42" | 28860 | SAE 8 | 1 1/4" | 45 |
| **3518WT** | 3 1/2" | 18" | 1 3/4" | 28" | 46" | 28860 | SAE 8 | 1 1/4" | 49 |
| **3520WT** | 3 1/2" | 20" | 1 3/4" | 30" | 50" | 28860 | SAE 8 | 1 1/4" | 52 |
| **3524WT** | 3 1/2" | 24" | 1 3/4" | 34" | 58" | 28860 | SAE 8 | 1 1/4" | 58 |
| **3530WT** | 3 1/2" | 30" | 1 3/4" | 40" | 70" | 28860 | SAE 8 | 1 1/4" | 67 |
| **3532WT** | 3 1/2" | 32" | 1 3/4" | 42" | 74" | 28860 | SAE 8 | 1 1/4" | 70 |
| **3536WT** | 3 1/2" | 36" | 1 3/4" | 46" | 82" | 28860 | SAE 8 | 1 1/4" | 76 |
| **3540WT** | 3 1/2" | 40" | 1 3/4" | 50" | 90" | 28860 | SAE 8 | 1 1/4" | 83 |
| **4004WT** | 4" | 4" | 2" | 14" | 18" | 37700 | SAE 8 | 1 1/2" | 34 |
| **4006WT** | 4" | 6" | 2" | 16" | 22" | 37700 | SAE 8 | 1 1/2" | 38 |
| **4008WT** | 4" | 8" | 2" | 18" | 26" | 37700 | SAE 8 | 1 1/2" | 41 |
| **4010WT** | 4" | 10" | 2" | 20" | 30" | 37700 | SAE 8 | 1 1/2" | 44 |
| **4012WT** | 4" | 12" | 2" | 22" | 34" | 37700 | SAE 8 | 1 1/2" | 49 |
| **4014WT** | 4" | 14" | 2" | 24" | 38" | 37700 | SAE 8 | 1 1/2" | 52 |
| **4016WT** | 4" | 16" | 2" | 26" | 42" | 37700 | SAE 8 | 1 1/2" | 55 |
| **4018WT** | 4" | 18" | 2" | 28" | 46" | 37700 | SAE 8 | 1 1/2" | 59 |
| **4020WT** | 4" | 20" | 2" | 30" | 50" | 37700 | SAE 8 | 1 1/2" | 63 |
| **4024WT** | 4" | 24" | 2" | 34" | 58" | 37700 | SAE 8 | 1 1/2" | 70 |
| **4030WT** | 4" | 30" | 2" | 40" | 70" | 37700 | SAE 8 | 1 1/2" | 82 |
| **4032WT** | 4" | 32" | 2" | 42" | 74" | 37700 | SAE 8 | 1 1/2" | 85 |
| **4036WT** | 4" | 36" | 2" | 46" | 82" | 37700 | SAE 8 | 1 1/2" | 92 |
| **4040WT** | 4" | 40" | 2" | 50" | 90" | 37700 | SAE 8 | 1 1/2" | 100 |
| **4048WT** | 4" | 48" | 2" | 58" | 106" | 37700 | SAE 8 | 1 1/2" | 115 |
| **5004WT** | 5" | 4" | 2 1/2" | 16" | 30" | 58900 | SAE 8 | 1 3/4" | 65 |
| **5006WT** | 5" | 6" | 2 1/2" | 18" | 24" | 58900 | SAE 8 | 1 3/4" | 70 |
| **5008WT** | 5" | 8" | 2 1/2" | 20" | 28" | 58900 | SAE 8 | 1 3/4" | 75 |
| **5010WT** | 5" | 10" | 2 1/2" | 22" | 32" | 58900 | SAE 8 | 1 3/4" | 80 |
| **5012WT** | 5" | 12" | 2 1/2" | 24" | 36" | 58900 | SAE 8 | 1 3/4" | 85 |
| **5014WT** | 5" | 14" | 2 1/2" | 26" | 40" | 58900 | SAE 8 | 1 3/4" | 90 |
| **5016WT** | 5" | 16" | 2 1/2" | 28" | 44" | 58900 | SAE 8 | 1 3/4" | 96 |
| **5018WT** | 5" | 18" | 2 1/2" | 30" | 48" | 58900 | SAE 8 | 1 3/4" | 101 |
| **5020WT** | 5" | 20" | 2 1/2" | 32" | 52" | 58900 | SAE 8 | 1 3/4" | 106 |
| **5024WT** | 5" | 24" | 2 1/2" | 36" | 60" | 58900 | SAE 8 | 1 3/4" | 116 |
| **5030WT** | 5" | 30" | 2 1/2" | 42" | 68" | 58900 | SAE 8 | 1 3/4" | 131 |
| **5032WT** | 5" | 32" | 2 1/2" | 44" | 72" | 58900 | SAE 8 | 1 3/4" | 137 |
| **5036WT** | 5" | 36" | 2 1/2" | 48" | 76" | 58900 | SAE 8 | 1 3/4" | 147 |
| **5040WT** | 5" | 40" | 2 1/2" | 52" | 84" | 58900 | SAE 8 | 1 3/4" | 157 |

# Available Model Numbers

| MODEL NO | BORE | STROKE | ROD | RETRACTED | EXTENDED | MAX FORCE LB | PORT | PIN | WEIGHT LB |
|---|---|---|---|---|---|---|---|---|---|
| SK-WT151000B | 1 1/2" BORE X 1" ROD SEAL KIT | | | | | | | | |
| SK-WT201250B | 2" BORE X 1 1/4" ROD SEAL KIT | | | | | | | | |
| SK-WT251500B | 2 1/2" BORE X 1 1/2" ROD SEAL KIT | | | | | | | | |
| SK-WT301500B | 3" BORE X 1 1/2" ROD SEAL KIT | | | | | | | | |
| SK-WT351750B | 3 1/2" BORE X 1 3/4" ROD SEAL KIT | | | | | | | | |
| SK-WT402000B | 4" BORE X 2" ROD SEAL KIT | | | | | | | | |

# WT Weld Tube Cylinders

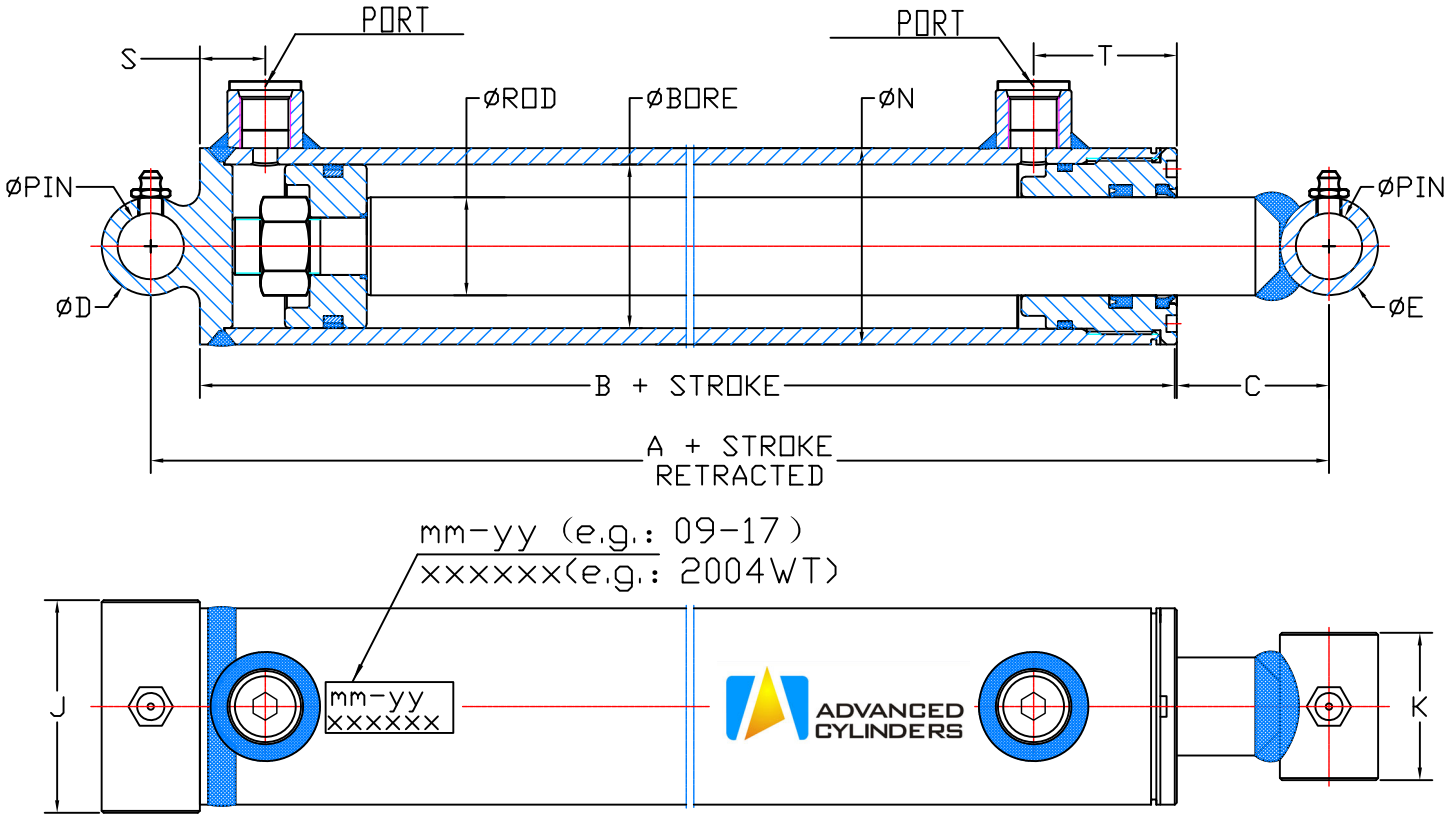


## Dimension

| BORE | 1 1/2" | 2" | 2 1/2" | 3" | 3 1/2" | 4" | 5" |
|---|---|---|---|---|---|---|---|
| A | 8" | 8” | 8” | 8” | 10” | 10” | 12” |
| B | 4.49" | 4.92" | 4.92" | 4.92" | 4.92" | 5.04" | 6.06" |
| C | 2.88" | 2.33" | 2.33" | 2.33" | 4.08" | 3.83" | 4.44" |
| D | 1.25" | 1.50" | 1.50" | 1.50" | 2.00" | 2.25" | 3.00" |
| E | 1.25" | 1.50" | 1.50" | 1.50" | 2.00" | 2.25" | 3.00" |
| J | 2.25" | 2.75" | 3.25" | 3.75" | 4.25" | 4.75" | 5.75" |
| K | 2.00" | 2.25" | 2.25" | 2.25" | 2.25" | 2.50" | 3.25" |
| N | 2.00" | 2.50" | 3.00" | 3.50" | 4.00" | 4.50" | 5.50" |
| S | 1.00" | 1.00" | 1.00" | 1.00" | 1.00" | 0.88" | 1.37" |
| T | 1.88" | 2.06" | 2.19" | 2.19" | 2.19" | 2.19" | 2.75" |

# SP Snow Plow Cylinders

## How to Order

15 06 - 0625 SP - M

15 = Rod (inches)
06 = Stroke (inches)
0625 = Pin (inches)
SP = Snow Plow
Replacement
A = Arctic
F = Fisher
M = Meyer
W = Western

## Specifications

Bore Sizes - 1 3/4" ~ 2 1/4"
Rod Sizes - 1 1/2" ~ 2"
Strokes - 6 "~ 16"

Pressure - 2500 PSI
Ports - NPT Port
Paint - Gloss Black

## Available Model Numbers

| MODEL NO | BORE SIZE | STROKE | ROD | RETERACTED | EXTENDED | MAX FORCE LB | PORT | PIN | WEIGHT LB |
|---|---|---|---|---|---|---|---|---|---|
| 1510-0750SP-A | 1 3/4" | 10" | 1 1/2" | 17" | 27" | 6010 | 1/4" NPT | 3/4" | 13 |
| 1512-0750SP-A | 1 3/4" | 12" | 1 1/2" | 19" | 31" | 6010 | 1/4" NPT | 3/4" | 15 |
| 1510-1000SP-F | 1 3/4" | 10" | 1 1/2" | 17 1/4" | 27 1/4" | 6010 | 1/4" NPT | 1" | 13 |
| 1512-1000SP-F | 1 3/4" | 12" | 1 1/2" | 19 1/4" | 31 1/4" | 6010 | 1/4" NPT | 1" | 15 |
| 2016-1250SP-F | 2 1/4" | 16" | 2" | 23 1/4" | 39 1/4" | 9940 | 1/4" NPT | 1 1/4" | 28 |
| 1506-0625SP-M | 1 3/4" | 6" | 1 1/2" | 12 3/8" | 18 3/8" | 6010 | 1/4" NPT | 5/8" | 10 |
| 1510-0625SP-M | 1 3/4" | 10" | 1 1/2" | 16 3/16" | 26 3/16" | 6010 | 1/4" NPT | 5/8" | 13 |
| 1512-0625SP-M | 1 3/4" | 12" | 1 1/2" | 18" | 30" | 6010 | 1/4" NPT | 5/8" | 14 |
| 2012-0625SP-M | 2 1/4" | 12" | 2" | 18" | 30" | 9940 | 1/4" NPT | 5/8" | 22 |
| 1506-0750SP-W | 1 3/4" | 6" | 1 1/2" | 13" | 19" | 6010 | 1/4" NPT | 3/4" | 10 |
| 1508-0750SP-W | 1 3/4" | 8" | 1 1/2" | 15 1/4" | 23 1/4" | 6010 | 1/4" NPT | 3/4" | 12 |
| 1510-0750SP-W | 1 3/4" | 10" | 1 1/2" | 17 1/4" | 27 1/4" | 6010 | 1/4" NPT | 3/4" | 13 |
| 1510-1000SP-W | 1 3/4" | 10" | 1 1/2" | 17" | 27" | 6010 | 1/4" NPT | 1" | 13 |
| 2006-0750SP-W | 2 1/4" | 6" | 2" | 13 3/16" | 19 3/16" | 9940 | 1/4" NPT | 3/4" | 17 |
| 2010-1000SP-W | 2 1/4" | 10" | 2" | 17 1/4" | 27 1/4" | 9940 | 1/4" NPT | 1" | 22 |
| 2016-1000SP-W | 2 1/4" | 16" | 2" | 23 5/16" | 39 5/16" | 9940 | 1/4" NPT | 1" | 29 |
| SK-SP175150B | 1 3/4" BORE X 1 1/2" ROD SEAL KIT | | | | | | | | |
| SK-SP225200B | 2 1/4" BORE X 2" ROD SEAL KIT | | | | | | | | |

# SP Snow Plow Cylinders

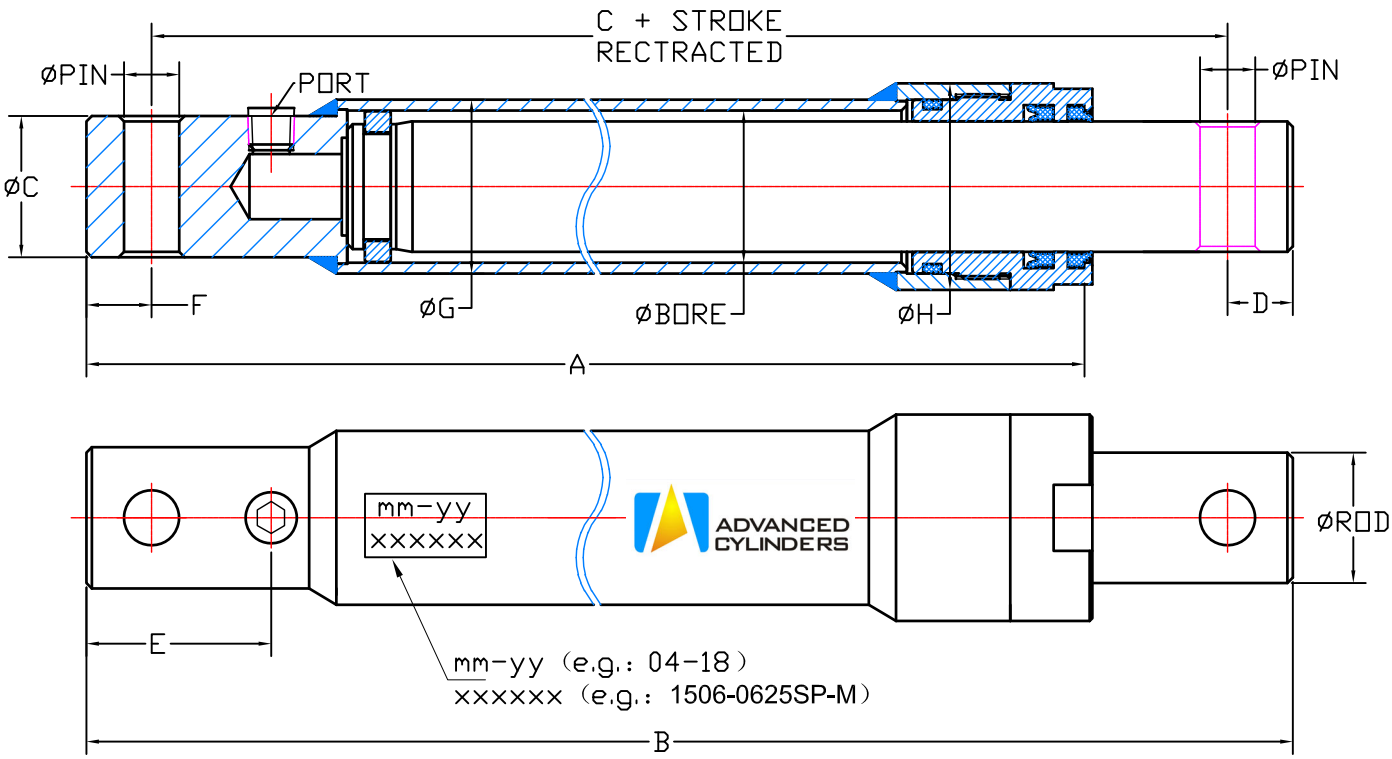


## Dimension

| MODEL NO | REPLACEMENT | A | B | C | D, F | E | G | H |
|---|---|---|---|---|---|---|---|---|
| 1510-0750SP-A | ARCTIC | 16.07" | 18.50" | 1.75" | 0.75" | 2.75" | 2.00" | 2.37" |
| 1512-0750SP-A | ARCTIC | 18.07" | 20.50" | 1.75" | 0.75" | 2.75" | 2.00" | 2.37" |
| 1510-1000SP-F | FISHER | 16.32" | 18.75" | 1.75" | 0.75" | 2.75" | 2.00" | 2.37" |
| 1512-1000SP-F | FISHER | 18.07" | 20.75" | 1.75" | 0.75" | 2.75" | 2.00" | 2.37" |
| 2016-1250SP-F | FISHER | 22.39" | 25.00" | 2.25" | 0.87" | 2.75" | 2.50" | 3.00" |
| 1506-0625SP-M | MEYER | 11.57" | 13.87" | 1.62" | 0.75" | 2.12" | 2.00" | 2.37" |
| 1510-0625SP-M | MEYER | 15.32" | 17.69" | 1.62" | 0.75" | 2.12" | 2.00" | 2.37" |
| 1512-0625SP-M | MEYER | 17.32" | 19.50" | 1.62" | 0.75" | 2.12" | 2.00" | 2.37" |
| 2012-0625SP-M | MEYER | 18.00" | 19.50" | 1.62" | 0.75" | 2.25" | 2.50" | 3.00" |
| 1506-0750SP-W | WESTERN | 12.31" | 14.37" | 1.75" | 0.68" | 2.75" | 2.00" | 2.37" |
| 1508-0750SP-W | WESTERN | 14.31" | 16.62" | 1.75" | 0.68" | 2.75" | 2.00" | 2.37" |
| 1510-0750SP-W | WESTERN | 16.31" | 18.62" | 1.75" | 0.68" | 2.75" | 2.00" | 2.37" |
| 1510-1000SP-W | WESTERN | 16.32" | 18.50" | 1.75" | 0.75" | 2.75" | 2.00" | 2.37" |
| 2006-0750SP-W | WESTERN | 12.38" | 14.69" | 2.25" | 0.75" | 2.75" | 2.50" | 3.00" |
| 2010-1000SP-W | WESTERN | 16.38" | 18.75" | 2.25" | 0.75" | 2.75" | 2.50" | 3.00" |
| 2016-1000SP-W | WESTERN | 22.38" | 24.81" | 2.25" | 0.75" | 2.56" | 2.50" | 3.00" |

# TH Tie Rod Cylinders

## How to Order

20 06 TH - ORB/NPT

| | |
|---|---|
| 20 | = Bore (inches) |
| 06 | = Stroke (inches) |
| TH | = Tie Rod Cylinder, 3000 PSI |
| ORB/NPT | = SAE Port and NPT Port |
| | or |
| AORB/NPT | = ASAE, SAE Port and NPT Port |
| | or |
| ORB | = SAE Port |

## Specifications

Bore Sizes - 2" ~ 5"
Strokes - 4 ~ 48"

Pressure - 3000 PSI
Ports - SAE Port and NPT Port

## Features

- GLAND - Ductile Iron with one SAE port and one NPT port on opposite sides
- TUBE - High tensile cold drawn tube, precision honed for extended seal life
- TIE ROD - High tensile alloy steel
- ROD - Hard chrome plated steel
- ROD Clevis - Ductile iron
- END CAP - Ductile iron with two SAE ports and two NPT ports on each side for greater flexibility of assembly
- PISTON - High grade ductile iron
- Use all Hallite type seals
  PISTON SEAL - Hallite 775
  ROD SEAL - Hallite 605
  ROD WIPER - Hallitie 520
  TUBE SEAL - Hallite AS-568 O-ring with anti-extrusion backup ring
- PAINT COLOR - Gloss black, or other customized color

## Available Model Numbers

| MODEL NO | BORE | STROKE | ROD | RETRACTED | EXTENDED | MAX FORCE LB | PORT | PIN | WEIGHT LB |
|---|---|---|---|---|---|---|---|---|---|
| **2008TH-AORB/NPT** | 2" | 8" | 1 1/8" | 20 1/4" | 28 1/4" | 9420 | SAE 8 / 3/8 NPT | 1" | 20 |
| **2508TH-AORB/NPT** | 2 1/2" | 8" | 1 1/4" | 20 1/4" | 28 1/4" | 14720 | SAE 8 / 3/8 NPT | 1" | 25 |
| **3008TH-AORB/NPT** | 3" | 8" | 1 1/4" | 20 1/4" | 28 1/4" | 21200 | SAE 8 / 1/2 NPT | 1" | 32 |
| **3016TH-AORB/NPT** | 3" | 16" | 1 1/2" | 31 1/2" | 47 1/2" | 21200 | SAE 8 / 1/2 NPT | 1 1/4" | 39 |
| **3508TH-AORB/NPT** | 3 1/2" | 8" | 1 1/4" | 20 1/4" | 28 1/4" | 28860 | SAE 8 / 1/2 NPT | 1" | 36 |
| **3516TH-AORB/NPT** | 3 1/2" | 16" | 1 1/2" | 31 1/2" | 47 1/2" | 28860 | SAE 8 / 1/2 NPT | 1 1/4" | 46 |
| **4008TH-AORB/NPT** | 4" | 8" | 1 1/2" | 20 1/4" | 28 1/4" | 37700 | SAE 8 / 1/2 NPT | 1" | 50 |

# Available Model Numbers

| MODEL NO | BORE | STROKE | ROD | RETRACTED | EXTENDED | MAX FORCE LB | PORT | PIN | WEIGHT LB |
|---|---|---|---|---|---|---|---|---|---|
| 4016TH-AORB/NPT | 4" | 16" | 2" | 31 1/2" | 47 1/2" | 37700 | SAE 8 / 1/2 NPT | 1 1/4" | 68 |
| 5008TH-AORB | 5" | 8" | 2" | 22 1/4" | 30 1/4" | 58900 | SAE 8 | 1 1/4" | 71 |
| 5016TH-AORB | 5" | 16" | 2" | 31 1/2" | 47 1/2" | 58900 | SAE 8 | 1 1/4" | 90 |
| 2004TH-ORB/NPT | 2" | 4" | 1 1/8" | 14 1/4" | 18 1/4" | 9420 | SAE 8 / 3/8 NPT | 1" | 18 |
| 2006TH-ORB/NPT | 2" | 6" | 1 1/8" | 16 1/4" | 22 1/4" | 9420 | SAE 8 / 3/8 NPT | 1" | 19 |
| 2008TH-ORB/NPT | 2" | 8" | 1 1/8" | 18 1/4" | 26 1/4" | 9420 | SAE 8 / 3/8 NPT | 1" | 20 |
| 2010TH-ORB/NPT | 2" | 10" | 1 1/8" | 20 1/4" | 30 1/4" | 9420 | SAE 8 / 3/8 NPT | 1" | 21 |
| 2012TH-ORB/NPT | 2" | 12" | 1 1/8" | 22 1/4" | 34 1/4" | 9420 | SAE 8 / 3/8 NPT | 1" | 25 |
| 2014TH-ORB/NPT | 2" | 14" | 1 1/8" | 24 1/4" | 38 1/4" | 9420 | SAE 8 / 3/8 NPT | 1" | 26 |
| 2016TH-ORB/NPT | 2" | 16" | 1 1/8" | 26 1/4" | 42 1/4" | 9420 | SAE 8 / 3/8 NPT | 1" | 28 |
| 2018TH-ORB/NPT | 2" | 18" | 1 1/8" | 28 1/4" | 46 1/4" | 9420 | SAE 8 / 3/8 NPT | 1" | 29 |
| 2020TH-ORB/NPT | 2" | 20" | 1 1/8" | 30 1/4" | 50 1/4" | 9420 | SAE 8 / 3/8 NPT | 1" | 31 |
| 2024TH-ORB/NPT | 2" | 24" | 1 1/8" | 34 1/4" | 58 1/4" | 9420 | SAE 8 / 3/8 NPT | 1" | 35 |
| 2030TH-ORB/NPT | 2" | 30" | 1 1/8" | 40 1/4" | 70 1/4" | 9420 | SAE 8 / 3/8 NPT | 1" | 39 |
| 2036TH-ORB/NPT | 2" | 36" | 1 1/8" | 46 1/4" | 82 1/4" | 9420 | SAE 8 / 3/8 NPT | 1" | 41 |
| 2040TH-ORB/NPT | 2" | 40" | 1 1/8" | 50 1/4" | 90 1/4" | 9420 | SAE 8 / 3/8 NPT | 1" | 45 |
| 2048TH-ORB/NPT | 2" | 48" | 1 1/8" | 58 1/4" | 106 1/4" | 9420 | SAE 8 / 3/8 NPT | 1" | 50 |
| 2504TH-ORB/NPT | 2 1/2" | 4" | 1 1/4" | 14 1/4" | 18 1/4" | 14720 | SAE 8 / 3/8 NPT | 1" | 17 |
| 2506TH-ORB/NPT | 2 1/2" | 6" | 1 1/4" | 16 1/4" | 22 1/4" | 14720 | SAE 8 / 3/8 NPT | 1" | 22 |
| 2508TH-ORB/NPT | 2 1/2" | 8" | 1 1/4" | 18 1/4" | 26 1/4" | 14720 | SAE 8 / 3/8 NPT | 1" | 24 |
| 2510TH-ORB/NPT | 2 1/2" | 10" | 1 1/4" | 20 1/4" | 30 1/4" | 14720 | SAE 8 / 3/8 NPT | 1" | 26 |
| 2512TH-ORB/NPT | 2 1/2" | 12" | 1 1/4" | 22 1/4" | 34 1/4" | 14720 | SAE 8 / 3/8 NPT | 1" | 27 |
| 2514TH-ORB/NPT | 2 1/2" | 14" | 1 1/4" | 24 1/4" | 38 1/4" | 14720 | SAE 8 / 3/8 NPT | 1" | 29 |
| 2516TH-ORB/NPT | 2 1/2" | 16" | 1 1/4" | 26 1/4" | 42 1/4" | 14720 | SAE 8 / 3/8 NPT | 1" | 31 |
| 2518TH-ORB/NPT | 2 1/2" | 18" | 1 1/4" | 28 1/4" | 46 1/4" | 14720 | SAE 8 / 3/8 NPT | 1" | 34 |
| 2520TH-ORB/NPT | 2 1/2" | 20" | 1 1/4" | 30 1/4" | 50 1/4" | 14720 | SAE 8 / 3/8 NPT | 1" | 36 |
| 2524TH-ORB/NPT | 2 1/2" | 24" | 1 1/4" | 34 1/4" | 58 1/4" | 14720 | SAE 8 / 3/8 NPT | 1" | 39 |
| 2530TH-ORB/NPT | 2 1/2" | 30" | 1 1/4" | 40 1/4" | 70 1/4" | 14720 | SAE 8 / 3/8 NPT | 1" | 46 |
| 2536TH-ORB/NPT | 2 1/2" | 36" | 1 1/4" | 46 1/4" | 82 1/4" | 14720 | SAE 8 / 3/8 NPT | 1" | 51 |
| 2540TH-ORB/NPT | 2 1/2" | 40" | 1 1/4" | 50 1/4" | 90 1/4" | 14720 | SAE 8 / 3/8 NPT | 1" | 55 |
| 2548TH-ORB/NPT | 2 1/2" | 48" | 1 1/4" | 58 1/4" | 106 1/4" | 14720 | SAE 8 / 3/8 NPT | 1" | 62 |
| 3004TH-ORB/NPT | 3" | 4" | 1 1/4" | 14 1/4" | 18 1/4" | 21200 | SAE 8 / 1/2 NPT | 1" | 23 |
| 3006TH-ORB/NPT | 3" | 6" | 1 1/4" | 16 1/4" | 22 1/4" | 21200 | SAE 8 / 1/2 NPT | 1" | 24 |
| 3008TH-ORB/NPT | 3" | 8" | 1 1/4" | 18 1/4" | 26 1/4" | 21200 | SAE 8 / 1/2 NPT | 1" | 27 |
| 3010TH-ORB/NPT | 3" | 10" | 1 1/4" | 20 1/4" | 30 1/4" | 21200 | SAE 8 / 1/2 NPT | 1" | 33 |
| 3012TH-ORB/NPT | 3" | 12" | 1 1/4" | 22 1/4" | 34 1/4" | 21200 | SAE 8 / 1/2 NPT | 1" | 33 |
| 3014TH-ORB/NPT | 3" | 14" | 1 1/4" | 24 1/4" | 38 1/4" | 21200 | SAE 8 / 1/2 NPT | 1" | 35 |
| 3016TH-ORB/NPT | 3" | 16" | 1 1/2" | 26 1/4" | 42 1/4" | 21200 | SAE 8 / 1/2 NPT | 1" | 39 |
| 3018TH-ORB/NPT | 3" | 18" | 1 1/2" | 28 1/4" | 46 1/4" | 21200 | SAE 8 / 1/2 NPT | 1" | 42 |
| 3020TH-ORB/NPT | 3" | 20" | 1 1/2" | 30 1/4" | 50 1/4" | 21200 | SAE 8 / 1/2 NPT | 1" | 45 |
| 3024TH-ORB/NPT | 3" | 24" | 1 1/2" | 34 1/4" | 58 1/4" | 21200 | SAE 8 / 1/2 NPT | 1" | 49 |
| 3030TH-ORB/NPT | 3" | 30" | 1 1/2" | 40 1/4" | 70 1/4" | 21200 | SAE 8 / 1/2 NPT | 1" | 58 |
| 3036TH-ORB/NPT | 3" | 36" | 1 1/2" | 46 1/4" | 82 1/4" | 21200 | SAE 8 / 1/2 NPT | 1" | 68 |

# Available Model Numbers

| MODEL NO | BORE | STROKE | ROD | RETRACTED | EXTENDED | MAX FORCE LB | PORT | PIN | WEIGHT LB |
|---|---|---|---|---|---|---|---|---|---|
| 3040TH-ORB/NPT | 3" | 40" | 1 1/2" | 50 1/4" | 90 1/4" | 21200 | SAE 8 / 1/2 NPT | 1" | 73 |
| 3048TH-ORB/NPT | 3" | 48" | 1 1/2" | 58 1/4" | 106 1/4" | 21200 | SAE 8 / 1/2 NPT | 1" | 82 |
| 3504TH-ORB/NPT | 3 1/2" | 4" | 1 1/4" | 14 1/4" | 18 1/4" | 28860 | SAE 8 / 1/2 NPT | 1" | 30 |
| 3506TH-ORB/NPT | 3 1/2" | 6" | 1 1/4" | 16 1/4" | 22 1/4" | 28860 | SAE 8 / 1/2 NPT | 1" | 33 |
| 3508TH-ORB/NPT | 3 1/2" | 8" | 1 1/4" | 18 1/4" | 26 1/4" | 28860 | SAE 8 / 1/2 NPT | 1" | 35 |
| 3510TH-ORB/NPT | 3 1/2" | 10" | 1 1/4" | 20 1/4" | 30 1/4" | 28860 | SAE 8 / 1/2 NPT | 1" | 37 |
| 3512TH-ORB/NPT | 3 1/2" | 12" | 1 1/4" | 22 1/4" | 34 1/4" | 28860 | SAE 8 / 1/2 NPT | 1" | 39 |
| 3514TH-ORB/NPT | 3 1/2" | 14" | 1 1/4" | 24 1/4" | 38 1/4" | 28860 | SAE 8 / 1/2 NPT | 1" | 42 |
| 3516TH-ORB/NPT | 3 1/2" | 16" | 1 1/2" | 26 1/4" | 42 1/4" | 28860 | SAE 8 / 1/2 NPT | 1" | 46 |
| 3518TH-ORB/NPT | 3 1/2" | 18" | 1 1/2" | 28 1/4" | 46 1/4" | 28860 | SAE 8 / 1/2 NPT | 1" | 47 |
| 3520TH-ORB/NPT | 3 1/2" | 20" | 1 1/2" | 30 1/4" | 50 1/4" | 28860 | SAE 8 / 1/2 NPT | 1" | 49 |
| 3524TH-ORB/NPT | 3 1/2" | 24" | 1 1/2" | 34 1/4" | 58 1/4" | 28860 | SAE 8 / 1/2 NPT | 1" | 55 |
| 3530TH-ORB/NPT | 3 1/2" | 30" | 1 1/2" | 40 1/4" | 70 1/4" | 28860 | SAE 8 / 1/2 NPT | 1" | 63 |
| 3536TH-ORB/NPT | 3 1/2" | 36" | 1 1/2" | 46 1/4" | 82 1/4" | 28860 | SAE 8 / 1/2 NPT | 1" | 72 |
| 3540TH-ORB/NPT | 3 1/2" | 40" | 1 1/2" | 50 1/4" | 90 1/4" | 28860 | SAE 8 / 1/2 NPT | 1" | 81 |
| 3548TH-ORB/NPT | 3 1/2" | 48" | 1 1/2" | 58 1/4" | 106 1/4" | 28860 | SAE 8 / 1/2 NPT | 1" | 99 |
| 4004TH-ORB/NPT | 4" | 4" | 1 1/2" | 14 1/4" | 18 1/4" | 37700 | SAE 8 / 1/2 NPT | 1" | 41 |
| 4006TH-ORB/NPT | 4" | 6" | 1 1/2" | 16 1/4" | 22 1/4" | 37700 | SAE 8 / 1/2 NPT | 1" | 45 |
| 4008TH-ORB/NPT | 4" | 8" | 1 1/2" | 18 1/4" | 26 1/4" | 37700 | SAE 8 / 1/2 NPT | 1" | 49 |
| 4010TH-ORB/NPT | 4" | 10" | 1 1/2" | 20 1/4" | 30 1/4" | 37700 | SAE 8 / 1/2 NPT | 1" | 52 |
| 4012TH-ORB/NPT | 4" | 12" | 1 1/2" | 22 1/4" | 34 1/4" | 37700 | SAE 8 / 1/2 NPT | 1" | 56 |
| 4014TH-ORB/NPT | 4" | 14" | 1 1/2" | 24 1/4" | 38 1/4" | 37700 | SAE 8 / 1/2 NPT | 1" | 60 |
| 4016TH-ORB/NPT | 4" | 16" | 1 3/4" | 26 1/4" | 42 1/4" | 37700 | SAE 8 / 1/2 NPT | 1" | 64 |
| 4018TH-ORB/NPT | 4" | 18" | 1 3/4" | 28 1/4" | 46 1/4" | 37700 | SAE 8 / 1/2 NPT | 1" | 68 |
| 4020TH-ORB/NPT | 4" | 20" | 1 3/4" | 30 1/4" | 50 1/4" | 37700 | SAE 8 / 1/2 NPT | 1" | 72 |
| 4024TH-ORB/NPT | 4" | 24" | 1 3/4" | 34 1/4" | 58 1/4" | 37700 | SAE 8 / 1/2 NPT | 1" | 80 |
| 4030TH-ORB/NPT | 4" | 30" | 2" | 40 1/4" | 70 1/4" | 37700 | SAE 8 / 1/2 NPT | 1" | 92 |
| 4036TH-ORB/NPT | 4" | 36" | 2" | 46 1/4" | 82 1/4" | 37700 | SAE 8 / 1/2 NPT | 1" | 104 |
| 4040TH-ORB/NPT | 4" | 40" | 2" | 50 1/4" | 90 1/4" | 37700 | SAE 8 / 1/2 NPT | 1" | 116 |
| 4048TH-ORB/NPT | 4" | 48" | 2" | 58 1/4" | 106 1/4" | 37700 | SAE 8 / 1/2 NPT | 1" | 140 |
| 5004TH-ORB | 5" | 4" | 2" | 16 1/4" | 20 1/4" | 58900 | SAE 8 | 1 1/4" | 60 |
| 5006TH-ORB | 5" | 6" | 2" | 18 1/4" | 24 1/4" | 58900 | SAE 8 | 1 1/4" | 63 |
| 5008TH-ORB | 5" | 8" | 2" | 20 1/4" | 28 1/4" | 58900 | SAE 8 | 1 1/4" | 67 |
| 5010TH-ORB | 5" | 10" | 2" | 22 1/4" | 32 1/4" | 58900 | SAE 8 | 1 1/4" | 71 |
| 5012TH-ORB | 5" | 12" | 2" | 24 1/4" | 36 1/4" | 58900 | SAE 8 | 1 1/4" | 75 |
| 5014TH-ORB | 5" | 14" | 2" | 26 1/4" | 40 1/4" | 58900 | SAE 8 | 1 1/4" | 80 |
| 5016TH-ORB | 5" | 16" | 2" | 28 1/4" | 44 1/4" | 58900 | SAE 8 | 1 1/4" | 82 |
| 5018TH-ORB | 5" | 18" | 2" | 30 1/4" | 48 1/4" | 58900 | SAE 8 | 1 1/4" | 90 |
| 5020TH-ORB | 5" | 20" | 2" | 32 1/4" | 52 1/4" | 58900 | SAE 8 | 1 1/4" | 95 |
| 5024TH-ORB | 5" | 24" | 2" | 36 1/4" | 60 1/4" | 58900 | SAE 8 | 1 1/4" | 100 |
| 5030TH-ORB | 5" | 30" | 2" | 42 1/4" | 72 1/4" | 58900 | SAE 8 | 1 1/4" | 108 |
| 5036TH-ORB | 5" | 36" | 2" | 48 1/4" | 84 1/4" | 58900 | SAE 8 | 1 1/4" | 118 |
| 5040TH-ORB | 5" | 40" | 2" | 52 1/4" | 92 1/4" | 58900 | SAE 8 | 1 1/4" | 140 |

# Available Model Numbers

| MODEL NO | BORE | STROKE | ROD | RETRACTED | EXTENDED | MAX FORCE LB | PORT | PIN | WEIGHT LB |
|---|---|---|---|---|---|---|---|---|---|
| **5048TH-ORB** | 5" | 48" | 2" | 60 1/4" | 108 1/4" | 49080 | SAE 8 | 1 1/4" | 161 |
| **SK-TH201125B** | 2" BORE X 1 1/8" ROD SEAL KIT | | | | | | | | |
| **SK-TH251125B** | 2 1/2" BORE X 1 1/8" ROD SEAL KIT | | | | | | | | |
| **SK-TH251250B** | 2 1/2" BORE X 1 1/4" ROD SEAL KIT | | | | | | | | |
| **SK-TH301250B** | 3" BORE X 1 1/4" ROD SEAL KIT | | | | | | | | |
| **SK-TH301500B** | 3" BORE X 1 1/2" ROD SEAL KIT | | | | | | | | |
| **SK-TH351250B** | 3 1/2" BORE X 1 1/4" ROD SEAL KIT | | | | | | | | |
| **SK-TH351500B** | 3 1/2" BORE X 1 1/2" ROD SEAL KIT | | | | | | | | |
| **SK-TH401250B** | 4" BORE X 1 1/4" ROD SEAL KIT | | | | | | | | |
| **SK-TH401500B** | 4" BORE X 1 1/2" ROD SEAL KIT | | | | | | | | |
| **SK-TH401750B** | 4" BORE X 1 3/4" ROD SEAL KIT | | | | | | | | |
| **SK-TH402000B** | 4" BORE X 2" ROD SEAL KIT | | | | | | | | |

# TH Tie Rod Cylinders

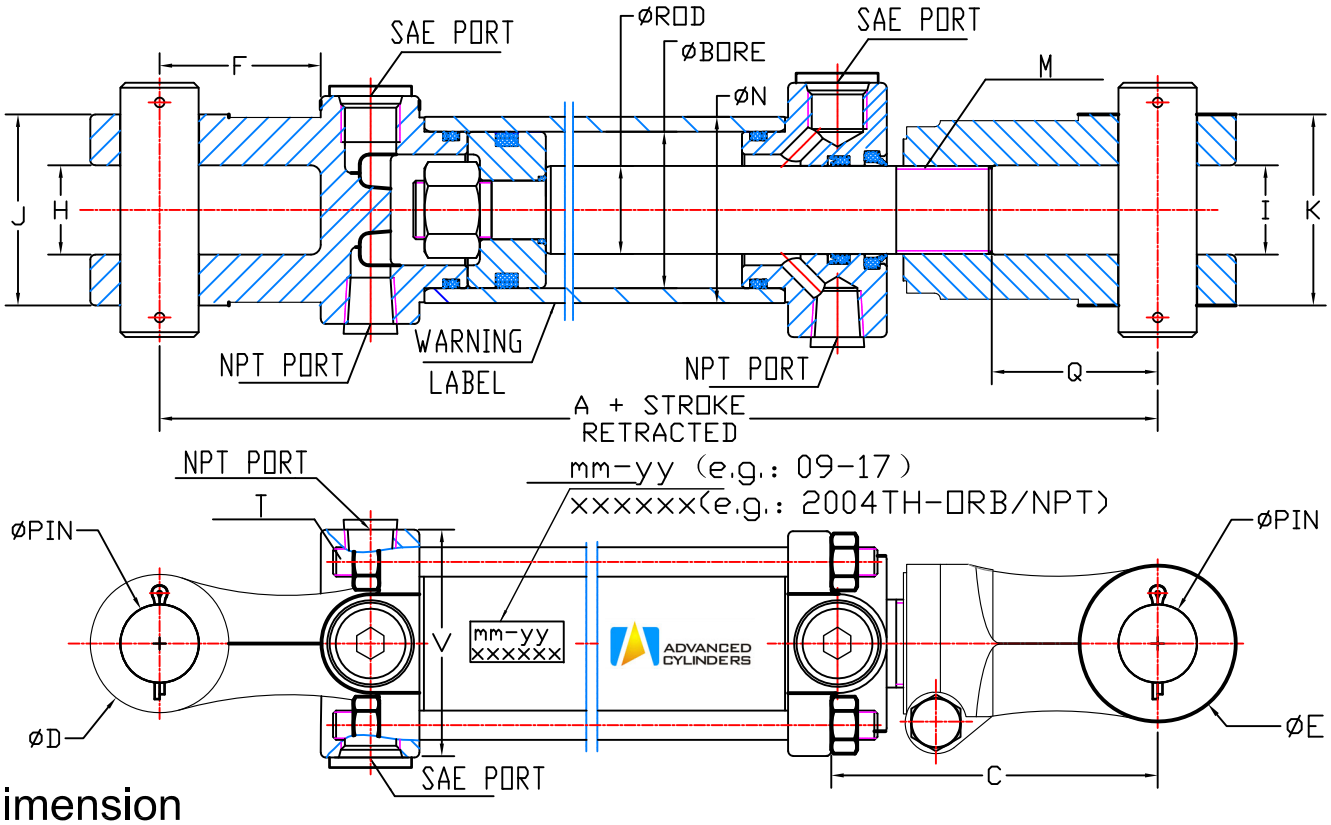


## Dimension

| BORE SIZE | 2" | 2 1/2" | 3" | 3 1/2" | 4" | 5" |
|---|---|---|---|---|---|---|
| A<br>NON-ASAE // ASAE | 10 1/4" // 12 1/4" | 10 1/4" // 12 1/4" | 10 1/4" // 12 1/4"<br>(3016 ASAE 15 1/2") | 10 1/4" // 12 1/4"<br>(3516 ASAE 15 1/2") | 10 1/4" // 12 1/4"<br>(4016 ASAE 15 1/2") | 10 1/4" // 14 1/4"<br>(5016 ASAE 15 1/2") |
| C<br>NON-ASAE // ASAE | 4.17" // 6.17" | 4.17" // 6.17" | 4.07" // 6.07"<br>(3016 ASAE 9.30") | 3.97" // 6.01"<br>(3516 ASAE 9.26") | 3.90" // 5.90"<br>(4016 ASAE 9.10") | 5.01" // 7.01"<br>(5016 ASAE 8.26") |
| D | 1.77" | 1.97" | 2.04" | 2.25" | 2.05" | 2.76" |
| E | 2.00" | 2.00" | 2.04" | 2.25" | 2.05" | 2.76" |
| F | 2.06" | 2.06" | 2.06" | 2.06" | 2.06" | 2.12" |
| H | 1.14" | 1.14" | 1.14" | 1.14" | 1.14" | 1.30" |
| I | 1.14" | 1.14" | 1.14" | 1.14" | 1.14" | 1.20" |
| J | 2.46" | 2.44" | 2.50" | 2.50" | 2.64" | 2.87" |
| K | 2.46" | 2.44" | 2.64" | 2.64" | 2.64" | 2.95" |
| M | 1 1/8-12UNF | 1 1/8-12UNF | 1 1/4-12UNF | 1 1/4-12UNF | 1 1/4-12UNF | 1 1/2-12UNF |
| N | 2.38" | 2.89" | 3.39" | 4.00" | 4.50" | 5.50" |
| Q | 2.12" | 2.12" | 2.12" | 2.12" | 2.12" | 2.12" |
| T | M10 | M10 | M12 | M14 | M16 | M20 |
| V | 2.91" | 3.31" | 3.86" | 4.29" | 5.12" | 6.46" |

# WP Weld Hole Cylinders

## How to Order

20 06 WP

20 = Bore (inches)
06 = Stroke (inches)
WP = Weld Hole, SAE Port

## Specifications

Bore Sizes - 1 1/2" ~ 4"
Strokes - 4 ~ 72"

Pressure - 3000 PSI
Ports - SAE Port

## Features

- CONSTRUCTION - Heavy duty welded
- TUBE - High tensile cold drawn tube, precision honed for extended seal life
- ROD - Hard chrome plated steel
- PISTON - High grade ductile iron
- Use all Hallite type seals
  PISTON SEAL - Hallite 755
  ROD SEAL - Hallite 605
  ROD WIPER - Hallitie 520
  TUBE SEAL - Hallite AS-568 O-ring with anti-extrusion backup ring
- PAINT COLOR - Gloss black, or other customized color

## Available Model Numbers

| MODEL NO | BORE | STROKE | ROD | RETRACTED | EXTENDED | MAX FORCE LB | PORT | PIN | WEIGHT LB |
|---|---|---|---|---|---|---|---|---|---|
| **1504WP** | 1 1/2" | 4" | 1" | 11" | 15" | 5300 | SAE 6 | 5/8" | 7 |
| **1506WP** | 1 1/2" | 6" | 1" | 13" | 19" | 5300 | SAE 6 | 5/8" | 8 |
| **1508WP** | 1 1/2" | 8" | 1" | 15" | 23" | 5300 | SAE 6 | 5/8" | 9 |
| **1510WP** | 1 1/2" | 10" | 1" | 17" | 27" | 5300 | SAE 6 | 5/8" | 11 |
| **1512WP** | 1 1/2" | 12" | 1" | 19" | 31" | 5300 | SAE 6 | 5/8" | 12 |
| **1514WP** | 1 1/2" | 14" | 1" | 21" | 35" | 5300 | SAE 6 | 5/8" | 13 |
| **1516WP** | 1 1/2" | 16" | 1" | 23" | 40" | 5300 | SAE 6 | 5/8" | 14 |
| **2004WP** | 2" | 4" | 1 1/4" | 12" | 16" | 9420 | SAE 8 | 3/4" | 10 |
| **2006WP** | 2" | 6" | 1 1/4" | 14" | 20" | 9420 | SAE 8 | 3/4" | 12 |
| **2008WP** | 2" | 8" | 1 1/4" | 16" | 24" | 9420 | SAE 8 | 3/4" | 13 |
| **2010WP** | 2" | 10" | 1 1/4" | 18" | 28" | 9420 | SAE 8 | 3/4" | 15 |

# Available Model Numbers

| MODEL NO | BORE | STROKE | ROD | RETRACTED | EXTENDED | MAX FORCE LB | PORT | PIN | WEIGHT LB |
|---|---|---|---|---|---|---|---|---|---|
| 2012WP | 2" | 12" | 1 1/4" | 20" | 32" | 9420 | SAE 8 | 3/4" | 17 |
| 2014WP | 2" | 14" | 1 1/4" | 22" | 36" | 9420 | SAE 8 | 3/4" | 18 |
| 2016WP | 2" | 16" | 1 1/4" | 24" | 40" | 9420 | SAE 8 | 3/4" | 19 |
| 2018WP | 2" | 18" | 1 1/4" | 26" | 44" | 9420 | SAE 8 | 3/4" | 21 |
| 2020WP | 2" | 20" | 1 1/4" | 28" | 48" | 9420 | SAE 8 | 3/4" | 22 |
| 2024WP | 2" | 24" | 1 1/4" | 32" | 56" | 9420 | SAE 8 | 3/4" | 25 |
| 2028WP | 2" | 28" | 1 1/4" | 36" | 64" | 9420 | SAE 8 | 3/4" | 28 |
| 2030WP | 2" | 30" | 1 1/4" | 38" | 68" | 9420 | SAE 8 | 3/4" | 30 |
| 2032WP | 2" | 32" | 1 1/4" | 40" | 72" | 9420 | SAE 8 | 3/4" | 31 |
| 2036WP | 2" | 36" | 1 1/4" | 44" | 80" | 9420 | SAE 8 | 3/4" | 34 |
| 2040WP | 2" | 40" | 1 1/4" | 48" | 88" | 9420 | SAE 8 | 3/4" | 36 |
| 2042WP | 2" | 48" | 1 1/4" | 50" | 92" | 9420 | SAE 8 | 3/4" | 37 |
| 2048WP | 2" | 48" | 1 1/4" | 56" | 104" | 9420 | SAE 8 | 3/4" | 41 |
| 2060WP | 2" | 60" | 1 1/4" | 68" | 128" | 9420 | SAE 8 | 3/4" | 50 |
| 2072WP | 2" | 72" | 1 1/4" | 80" | 152" | 9420 | SAE 8 | 3/4" | 59 |
| 2504WP | 2 1/2" | 4" | 1 3/8" | 12" | 16" | 14720 | SAE 8 | 3/4" | 14 |
| 2506WP | 2 1/2" | 6" | 1 3/8" | 14" | 20" | 14720 | SAE 8 | 3/4" | 16 |
| 2508WP | 2 1/2" | 8" | 1 3/8" | 16" | 24" | 14720 | SAE 8 | 3/4" | 18 |
| 2510WP | 2 1/2" | 10" | 1 3/8" | 18" | 28" | 14720 | SAE 8 | 3/4" | 20 |
| 2512WP | 2 1/2" | 12" | 1 3/8" | 20" | 32" | 14720 | SAE 8 | 3/4" | 22 |
| 2514WP | 2 1/2" | 14" | 1 3/8" | 22" | 36" | 14720 | SAE 8 | 3/4" | 24 |
| 2516WP | 2 1/2" | 16" | 1 3/8" | 24" | 40" | 14720 | SAE 8 | 3/4" | 26 |
| 2518WP | 2 1/2" | 18" | 1 3/8" | 26" | 44" | 14720 | SAE 8 | 3/4" | 28 |
| 2520WP | 2 1/2" | 20" | 1 3/8" | 28" | 48" | 14720 | SAE 8 | 3/4" | 30 |
| 2524WP | 2 1/2" | 24" | 1 3/8" | 32" | 56" | 14720 | SAE 8 | 3/4" | 34 |
| 2528WP | 2 1/2" | 28" | 1 3/8" | 36" | 64" | 14720 | SAE 8 | 3/4" | 39 |
| 2530WP | 2 1/2" | 30" | 1 3/8" | 38" | 68" | 14720 | SAE 8 | 3/4" | 41 |
| 2532WP | 2 1/2" | 32" | 1 3/8" | 40" | 72" | 14720 | SAE 8 | 3/4" | 43 |
| 2536WP | 2 1/2" | 36" | 1 3/8" | 44" | 80" | 14720 | SAE 8 | 3/4" | 46 |
| 2540WP | 2 1/2" | 40" | 1 3/8" | 48" | 88" | 14720 | SAE 8 | 3/4" | 51 |
| 2542WP | 2 1/2" | 42" | 1 3/8" | 50" | 92" | 14720 | SAE 8 | 3/4" | 53 |
| 2548WP | 2 1/2" | 48" | 1 3/8" | 56" | 104" | 14720 | SAE 8 | 3/4" | 59 |
| 2560WP | 2 1/2" | 60" | 1 3/8" | 68" | 128" | 14720 | SAE 8 | 3/4" | 68 |
| 3004WP | 3" | 4" | 1 1/2" | 12" | 16" | 21200 | SAE 8 | 1" | 19 |
| 3006WP | 3" | 6" | 1 1/2" | 14" | 20" | 21200 | SAE 8 | 1" | 21 |
| 3008WP | 3" | 8" | 1 1/2" | 16" | 24" | 21200 | SAE 8 | 1" | 24 |
| 3010WP | 3" | 10" | 1 1/2" | 18" | 28" | 21200 | SAE 8 | 1" | 26 |
| 3012WP | 3" | 12" | 1 1/2" | 20" | 32" | 21200 | SAE 8 | 1" | 28 |
| 3014WP | 3" | 14" | 1 1/2" | 22" | 36" | 21200 | SAE 8 | 1" | 31 |
| 3016WP | 3" | 16" | 1 1/2" | 24" | 40" | 21200 | SAE 8 | 1" | 33 |
| 3018WP | 3" | 18" | 1 1/2" | 26" | 44" | 21200 | SAE 8 | 1" | 36 |
| 3020WP | 3" | 20" | 1 1/2" | 28" | 48" | 21200 | SAE 8 | 1" | 38 |
| 3024WP | 3" | 24" | 1 1/2" | 32" | 56" | 21200 | SAE 8 | 1" | 43 |

# Available Model Numbers

| MODEL NO | BORE | STROKE | ROD | RETRACTED | EXTENDED | MAX FORCE LB | PORT | PIN | WEIGHT LB |
|---|---|---|---|---|---|---|---|---|---|
| 3028WP | 3" | 28" | 1 1/2" | 36" | 64" | 21200 | SAE 8 | 1" | 46 |
| 3030WP | 3" | 30" | 1 1/2" | 38" | 68" | 21200 | SAE 8 | 1" | 48 |
| 3032WP | 3" | 32" | 1 1/2" | 40" | 72" | 21200 | SAE 8 | 1" | 51 |
| 3036WP | 3" | 36" | 1 1/2" | 44" | 80" | 21200 | SAE 8 | 1" | 57 |
| 3040WP | 3" | 40" | 1 1/2" | 48" | 88" | 21200 | SAE 8 | 1" | 63 |
| 3042WP | 3" | 42" | 1 1/2" | 50" | 92" | 21200 | SAE 8 | 1" | 65 |
| 3048WP | 3" | 48" | 1 1/2" | 56" | 104" | 21200 | SAE 8 | 1" | 73 |
| 3060WP | 3" | 60" | 1 1/2" | 68" | 128" | 21200 | SAE 8 | 1" | 87 |
| 3504WP | 3 1/2" | 4" | 1 3/4" | 12" | 16" | 28860 | SAE 8 | 1" | 24 |
| 3506WP | 3 1/2" | 6" | 1 3/4" | 14" | 20" | 28860 | SAE 8 | 1" | 27 |
| 3508WP | 3 1/2" | 8" | 1 3/4" | 16" | 24" | 28860 | SAE 8 | 1" | 30 |
| 3510WP | 3 1/2" | 10" | 1 3/4" | 18" | 28" | 28860 | SAE 8 | 1" | 33 |
| 3512WP | 3 1/2" | 12" | 1 3/4" | 20" | 32" | 28860 | SAE 8 | 1" | 36 |
| 3514WP | 3 1/2" | 14" | 1 3/4" | 22" | 36" | 28860 | SAE 8 | 1" | 39 |
| 3516WP | 3 1/2" | 16" | 1 3/4" | 24" | 40" | 28860 | SAE 8 | 1" | 42 |
| 3518WP | 3 1/2" | 18" | 1 3/4" | 26" | 44" | 28860 | SAE 8 | 1" | 45 |
| 3520WP | 3 1/2" | 20" | 1 3/4" | 28" | 48" | 28860 | SAE 8 | 1" | 48 |
| 3524WP | 3 1/2" | 24" | 1 3/4" | 32" | 56" | 28860 | SAE 8 | 1" | 54 |
| 3528WP | 3 1/2" | 28" | 1 3/4" | 36" | 64" | 28860 | SAE 8 | 1" | 60 |
| 3530WP | 3 1/2" | 30" | 1 3/4" | 38" | 68" | 28860 | SAE 8 | 1" | 63 |
| 3532WP | 3 1/2" | 32" | 1 3/4" | 40" | 72" | 28860 | SAE 8 | 1" | 66 |
| 3536WP | 3 1/2" | 36" | 1 3/4" | 44" | 80" | 28860 | SAE 8 | 1" | 72 |
| 3540WP | 3 1/2" | 40" | 1 3/4" | 48" | 88" | 28860 | SAE 8 | 1" | 79 |
| 3542WP | 3 1/2" | 42" | 1 3/4" | 50" | 92" | 28860 | SAE 8 | 1" | 82 |
| 3548WP | 3 1/2" | 48" | 1 3/4" | 56" | 104" | 28860 | SAE 8 | 1" | 91 |
| 3560WP | 3 1/2" | 60" | 1 3/4" | 68" | 128" | 28860 | SAE 8 | 1" | 109 |
| 4004WP | 4" | 4" | 2" | 13" | 17" | 37700 | SAE 8 | 1 1/4" | 33 |
| 4006WP | 4" | 6" | 2" | 15" | 21" | 37700 | SAE 8 | 1 1/4" | 36 |
| 4008WP | 4" | 8" | 2" | 17" | 25" | 37700 | SAE 8 | 1 1/4" | 40 |
| 4010WP | 4" | 10" | 2" | 19" | 29" | 37700 | SAE 8 | 1 1/4" | 44 |
| 4012WP | 4" | 12" | 2" | 21" | 33" | 37700 | SAE 8 | 1 1/4" | 47 |
| 4014WP | 4" | 14" | 2" | 23" | 37" | 37700 | SAE 8 | 1 1/4" | 51 |
| 4016WP | 4" | 16" | 2" | 25" | 41" | 37700 | SAE 8 | 1 1/4" | 55 |
| 4018WP | 4" | 18" | 2" | 27" | 45" | 37700 | SAE 8 | 1 1/4" | 58 |
| 4020WP | 4" | 20" | 2" | 29" | 49" | 37700 | SAE 8 | 1 1/4" | 62 |
| 4024WP | 4" | 24" | 2" | 33" | 57" | 37700 | SAE 8 | 1 1/4" | 70 |
| 4028WP | 4" | 28" | 2" | 37" | 65" | 37700 | SAE 8 | 1 1/4" | 77 |
| 4030WP | 4" | 30" | 2" | 39" | 69" | 37700 | SAE 8 | 1 1/4" | 81 |
| 4032WP | 4" | 32" | 2" | 41" | 73" | 37700 | SAE 8 | 1 1/4" | 84 |
| 4036WP | 4" | 36" | 2" | 45" | 81" | 37700 | SAE 8 | 1 1/4" | 92 |
| 4040WP | 4" | 40" | 2" | 49" | 89" | 37700 | SAE 8 | 1 1/4" | 99 |
| 4042WP | 4" | 42" | 2" | 51" | 93" | 37700 | SAE 8 | 1 1/4" | 103 |
| 4048WP | 4" | 48" | 2" | 57" | 105" | 37700 | SAE 8 | 1 1/4" | 114 |

# Available Model Numbers

| MODEL NO | BORE | STROKE | ROD | RETRACTED | EXTENDED | MAX FORCE LB | PORT | PIN | WEIGHT LB |
|---|---|---|---|---|---|---|---|---|---|
| **4060WP** | 4" | 60" | 2" | 69" | 129" | 37700 | SAE 8 | 1 1/4" | 136 |
| **SK-WP151000B** | 1 1/2" BORE X 1" ROD SEAL KIT | | | | | | | | |
| **SK-WP201250B** | 2" BORE X 1 1/4" ROD SEAL KIT | | | | | | | | |
| **SK-WP251375B** | 2 1/2" BORE X 1 3/8" ROD SEAL KIT | | | | | | | | |
| **SK-WP301500B** | 3" BORE X 1 1/2" ROD SEAL KIT | | | | | | | | |
| **SK-WP351750B** | 3 1/2" BORE X 1 3/4" ROD SEAL KIT | | | | | | | | |
| **SK-WP402000B** | 4" BORE X 2" ROD SEAL KIT | | | | | | | | |

# WP Weld Hole Cylinders

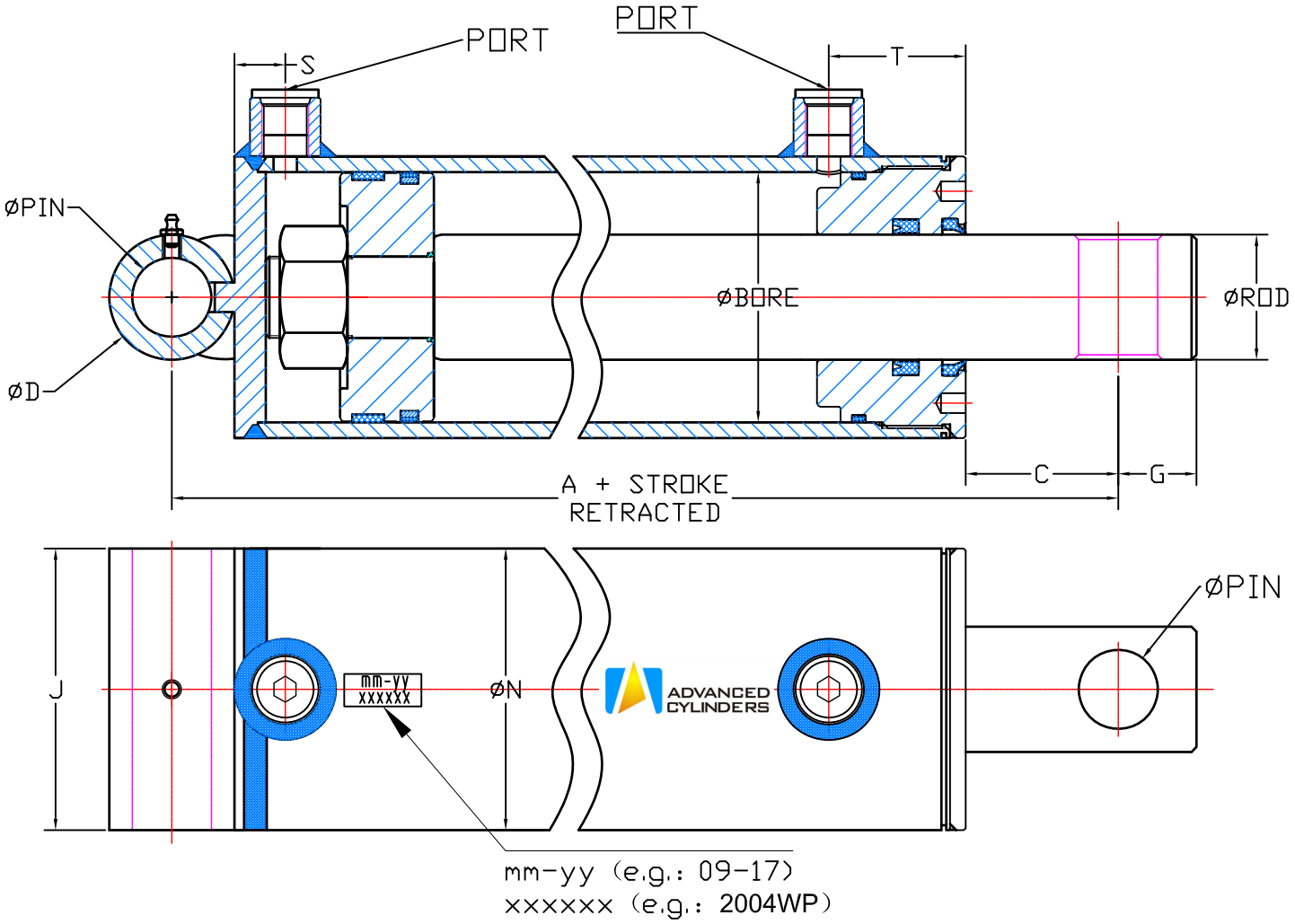


## Dimension

| BORE | 1 1/2" | 2" | 2 1/2" | 3" | 3 1/2" | 4" |
|---|---|---|---|---|---|---|
| A | 7" | 8” | 8” | 8” | 8" | 9" |
| C | 2.43" | 3.37" | 3.12" | 2.56" | 2.43" | 2.43" |
| D | 1.25" | 1.25" | 1.25" | 1.50" | 1.50" | 2.00" |
| G | 0.62" | 0.75" | 0.75" | 1.00" | 1.00" | 1.25" |
| J | 2.00" | 2.50" | 3.00" | 3.50" | 4.00" | 4.50" |
| N | 2.00" | 2.50" | 3.00" | 3.50" | 4.00" | 4.50" |
| S | 0.81" | 0.81" | 0.81" | 0.81" | 0.81" | 0.81" |
| T | 1.87" | 1.87" | 2.06" | 2.18" | 2.18" | 2.18" |

# TC Telescopic Cylinders for Pin and Trunnion Mount

## How to Order

6 3 - 156 TC - 4480

| | |
|---|---|
| 6 | = Nominal OD of Largest Stage |
| 3 | = Number of Stage |
| 156 | = Stroke (inches) |
| TC | = Telescopic Cylinder |
| 4480 | = Design Code / Series* |

Note * = 4689 and 4526 are Trunnion Mount. All others are Pin Mount.

## Specifications

Single-Acting with Pin Mount andTrunnion Mount Design.

# TC Telescopic Cylinders for Pin and Trunnion Mount

## Pin Mount

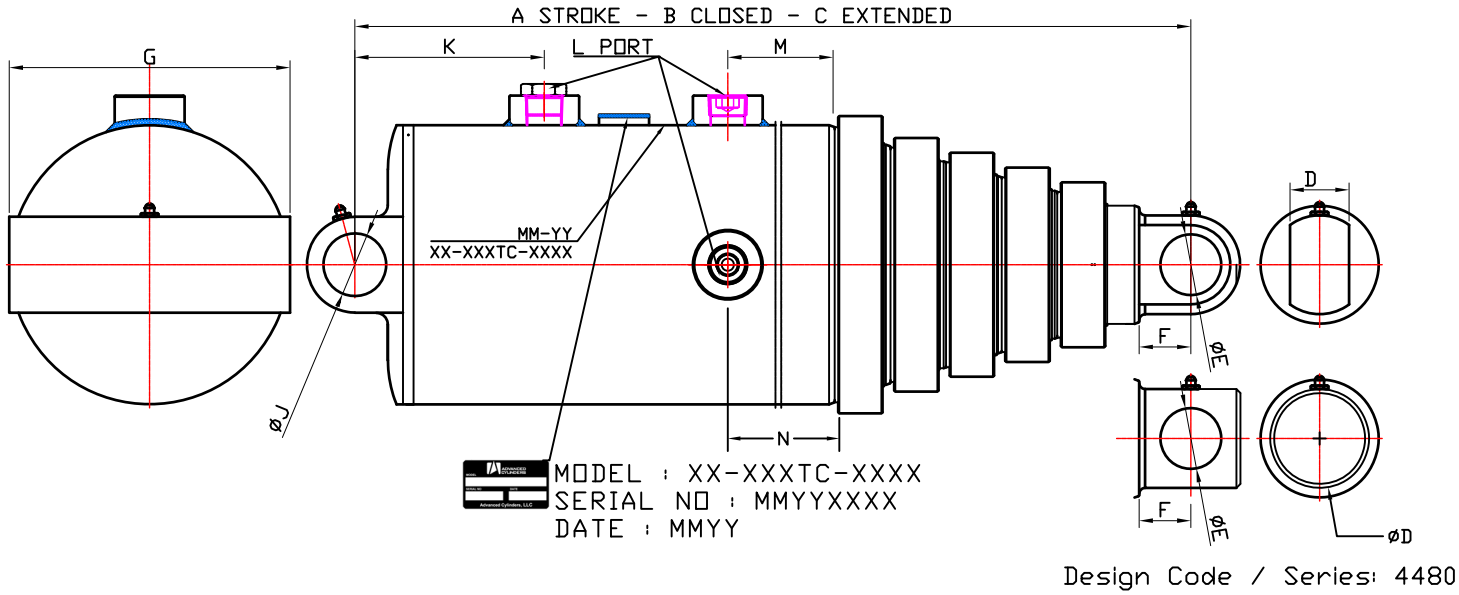


## Available Model Numbers - Pin Mount

| PIN MOUNT MODEL NO | A | B | C | D | E | F | G | J | K | L | M | N | GAL OF OIL | | WT |
|---|---|---|---|---|---|---|---|---|---|---|---|---|---|---|---|
| | IN | IN | IN | IN | IN | IN | IN | IN | IN | PORT | IN | IN | FILL | EXT | LB |
| **53-72TC-4630** | 71.94 | 36.62 | 108.56 | 1.5 | 2.06 | 2 | 7 | 2.06 | 19.5 | 3/4" NPT | N/A | N/A | 1.3 | 4 | 155 |
| **53-84TC-4630** | 84.19 | 41.12 | 125.31 | 1.5 | 2.06 | 2 | 7 | 2.06 | 19.5 | 3/4" NPT | N/A | N/A | 1.4 | 4.7 | 170 |
| **53-106TC-4630** | 106.06 | 48 | 154.06 | 1.5 | 2.06 | 2 | 7 | 2.06 | 19.5 | 3/4" NPT | N/A | N/A | 1.7 | 6 | 218 |
| **53-128TC-4648** | 125.94 | 54.5 | 180.44 | 1.5 | 1.78 | 2 | 7 | 2.06 | 26.5 | SAE #16 | N/A | N/A | 2 | 7.1 | 227 |
| **53-130TC-4649** | 126.13 | 54.56 | 180.69 | 2 | 1.78 | 1.88 | 7 | 2.06 | 33.5 | 1" NPT | N/A | N/A | 2 | 7.1 | 231 |
| **63-84TC-4680** | 84.38 | 41 | 125.38 | 2 | 2.06 | 1.75 | 7 | 2.13 | 19.5 | 1" NPT | N/A | N/A | 1.8 | 7.3 | 238 |
| **63-104TC-4680** | 103.75 | 47.62 | 151.37 | 2 | 2.06 | 1.75 | 7 | 2.13 | 19.5 | 1" NPT | N/A | N/A | 2.1 | 9 | 269 |
| **63-108TC-4680** | 108.38 | 49 | 157.38 | 2 | 2.06 | 1.75 | 7 | 2.13 | 19.5 | 1" NPT | N/A | N/A | 2.2 | 9.4 | 278 |
| **63-120TC-4680** | 120.38 | 53 | 173.38 | 2 | 2.06 | 1.75 | 7 | 2.13 | 19.5 | 1" NPT | N/A | N/A | 2.4 | 10.4 | 291 |
| **63-126TC-4680** | 126.38 | 55 | 181.38 | 2 | 2.06 | 1.75 | 7 | 2.13 | 19.5 | 1" NPT | N/A | N/A | 2.5 | 11 | 300 |
| **63-132TC-4680** | 132.38 | 57 | 189.38 | 2 | 2.06 | 1.75 | 7 | 2.13 | 19.5 | 1" NPT | N/A | N/A | 2.7 | 11.5 | 302 |
| **63-140TC-4680** | 140.62 | 59.75 | 200.37 | 2 | 2.06 | 1.75 | 7 | 2.13 | 19.5 | 1" NPT | N/A | N/A | 2.8 | 12.2 | 326 |
| **63-160TC-4680** | 160.12 | 68.38 | 228.5 | 2 | 2.06 | 1.75 | 7 | 2.13 | 19.5 | 1" NPT | N/A | N/A | 3.3 | 14 | 362 |
| **64-135TC-4480** | 134.75 | 47.13 | 181.88 | 2.69 | 1.56 | 1.63 | 8 | 1.88 | N/A | 1" NPT | 4.5 | 4.5 | 2.5 | 9.7 | 287 |
| **64-156TC-4480** | 155.75 | 52.38 | 208.13 | 2.69 | 1.56 | 1.63 | 8 | 1.88 | N/A | 1" NPT | 4.5 | 4.5 | 2.8 | 11.2 | 320 |
| **64-156TC-4483** | 155.75 | 52.63 | 208.38 | 1.75 | 2.03 | 1.88 | 7.25 | 2.06 | 6.38 | 1" NPT | 5 | N/A | 2.8 | 11.2 | 320 |
| **73-110TC-4569** | 108.94 | 49.88 | 158.81 | 2 | 2.06 | 1.75 | 8.63 | 2.13 | 6.5 | 1" NPT | 12 | N/A | 2.7 | 13.5 | 318 |
| **73-118TC-4569** | 117.19 | 52.13 | 169.31 | 2 | 2.06 | 1.75 | 8.63 | 2.13 | 6.5 | 1" NPT | 12 | N/A | 2.8 | 14.5 | 332 |
| **73-127TC-4569** | 126.19 | 55.13 | 181.31 | 2 | 2.06 | 1.75 | 8.63 | 2.13 | 6.5 | 1" NPT | 12 | N/A | 3 | 15.7 | 352 |
| **73-142TC-4569** | 141.19 | 60.13 | 201.31 | 2 | 2.06 | 1.75 | 8.63 | 2.13 | 6.5 | 1" NPT | 12 | N/A | 3.3 | 17.5 | 380 |
| **73-151TC-4569** | 150.19 | 63.13 | 213.31 | 2 | 2.06 | 1.75 | 8.63 | 2.13 | 6.5 | 1" NPT | 12 | N/A | 3.5 | 18.7 | 407 |
| **74-120TC-4561** | 119.94 | 44.75 | 164.69 | 2 | 2.06 | 1.75 | 8.63 | 2.13 | 6.5 | 1" NPT | 12 | N/A | 2.8 | 12.6 | 309 |

# Available Model Numbers - Pin Mount

| PIN MOUNT MODEL NO | A | B | C | D | E | F | G | J | K | L | M | N | GAL OF OIL | | WT |
|---|---|---|---|---|---|---|---|---|---|---|---|---|---|---|---|
| | IN | IN | IN | IN | IN | IN | IN | IN | IN | PORT | IN | IN | FILL | EXT | LB |
| **74-135TC-4561** | 134.69 | 48.25 | 182.94 | 2 | 2.06 | 1.75 | 8.63 | 2.13 | 6.5 | 1" NPT | 12 | N/A | 3.1 | 14.2 | 348 |
| **74-140TC-4561** | 139.69 | 49.5 | 189.19 | 2 | 2.06 | 1.75 | 8.63 | 2.13 | 6.5 | 1" NPT | 12 | N/A | 3.2 | 14.8 | 346 |
| **74-156TC-4561** | 154.56 | 53.38 | 207.94 | 2 | 2.06 | 1.75 | 8.63 | 2.13 | 6.5 | 1" NPT | 12 | N/A | 3.5 | 16.2 | 386 |
| **74-161TC-4561** | 159.56 | 54.63 | 214.19 | 2 | 2.06 | 1.75 | 8.63 | 2.13 | 6.5 | 1" NPT | 12 | N/A | 3.6 | 16.8 | 384 |
| **74-167TC-4561** | 166.06 | 56.25 | 222.31 | 2 | 2.06 | 1.75 | 8.63 | 2.13 | 6.5 | 1" NPT | 12 | N/A | 3.7 | 17.5 | 410 |
| **74-180TC-4561** | 179.06 | 59.5 | 238.56 | 2 | 2.06 | 1.75 | 8.63 | 2.13 | 6.5 | 1" NPT | 12 | N/A | 4 | 18.9 | 441 |
| **84-148TC-4502** | 145 | 51.5 | 196.5 | 2 | 2.06 | 1.75 | 9.5 | 2.13 | 6.63 | 1" NPT | 12.75 | N/A | 3.9 | 21.2 | 451 |
| **84-156TC-4502** | 153 | 53.5 | 206.5 | 2 | 2.06 | 1.75 | 9.5 | 2.13 | 6.63 | 1" NPT | 12.75 | N/A | 4.1 | 22.4 | 474 |
| **84-161TC-4502** | 157.5 | 54.88 | 212.38 | 2 | 2.06 | 1.75 | 9.5 | 2.13 | 6.63 | 1" NPT | 12.75 | N/A | 4.2 | 23.1 | 483 |
| **84-170TC-4502** | 167 | 57 | 224 | 2 | 2.06 | 1.75 | 9.5 | 2.13 | 6.63 | 1" NPT | 12.75 | N/A | 4.4 | 24.5 | 504 |
| **84-180TC-4502** | 176.5 | 59.5 | 236 | 2 | 2.06 | 1.75 | 9.5 | 2.13 | 6.63 | 1" NPT | 12.75 | N/A | 4.6 | 25.9 | 527 |
| **85-170TC-4402** | 168.63 | 49.88 | 218.5 | 2 | 2.06 | 1.75 | 9.5 | 2.13 | 6.63 | 1" NPT | 12.75 | N/A | 4.2 | 21.3 | 462 |
| **85-190TC-4402** | 188.63 | 53.88 | 242.5 | 2 | 2.06 | 1.75 | 9.5 | 2.13 | 6.63 | 1" NPT | 12.75 | N/A | 4.6 | 23.8 | 527 |
| **85-200TC-4402** | 198.62 | 55.88 | 254.5 | 2 | 2.06 | 1.75 | 9.5 | 2.13 | 6.63 | 1" NPT | 12.75 | N/A | 4.9 | 25.3 | 519 |
| **85-220TC-4402** | 218.63 | 59.88 | 278.5 | 2 | 2.06 | 1.75 | 9.5 | 2.13 | 6.63 | 1" NPT | 12.75 | N/A | 5.2 | 27.7 | 584 |
| **85-235TC-4402** | 234.25 | 65 | 299.25 | 2 | 2.06 | 1.75 | 9.5 | 2.13 | 6.63 | 1" NPT | 12.75 | N/A | 5.8 | 29.7 | 644 |
| **85-250TC-4402** | 249.25 | 68 | 317.25 | 2 | 2.06 | 1.75 | 9.5 | 2.13 | 6.63 | 1" NPT | 12.75 | N/A | 6.1 | 31.7 | 692 |
| **85-265TC-4402** | 263.63 | 70.88 | 334.5 | 2 | 2.06 | 1.75 | 9.5 | 2.13 | 6.63 | 1" NPT | 12.75 | N/A | 5.6 | 33.9 | 747 |
| **85-265TC-4510** | 264.25 | 74.38 | 338.63 | 2 | 2.06 | 1.75 | 9.5 | 2.13 | 6.63 | 1" NPT | 12.75 | N/A | 6.8 | 33.7 | 710 |
| **85-280TC-4510** | 279.25 | 77.5 | 356.75 | 2 | 2.06 | 1.75 | 9.5 | 2.13 | 6.63 | 1" NPT | 12.75 | N/A | 7.1 | 35.7 | 746 |
| **85-285TC-4510** | 284.25 | 78.5 | 362.75 | 2 | 2.06 | 1.75 | 9.5 | 2.13 | 6.63 | 1" NPT | 12.75 | N/A | 7.2 | 36.4 | 758 |
| **95-220TC-4500** | 219.63 | 60.88 | 280.5 | 2 | 2.06 | 1.75 | 10.69 | 2.13 | 6.5 | 1" NPT | 12.75 | N/A | 6.6 | 38 | 723 |
| **95-235TC-4500** | 232.75 | 65 | 297.75 | 2 | 2.06 | 1.75 | 10.69 | 2.13 | 6.5 | 1" NPT | 12.75 | N/A | 7.2 | 40.1 | 783 |
| **95-250TC-4500** | 249.88 | 72.63 | 322.5 | 2 | 2.06 | 1.75 | 10.69 | 2.13 | 6.5 | 1" NPT | 12.75 | N/A | 8.2 | 43.6 | 891 |
| **95-280TC-4500** | 279.88 | 78.63 | 358.5 | 2 | 2.06 | 1.75 | 10.69 | 2.13 | 6.5 | 1" NPT | 12.75 | N/A | 8.9 | 48.9 | 956 |
| **95-300TC-4500** | 299.88 | 82.63 | 382.5 | 2 | 2.06 | 1.75 | 10.69 | 2.13 | 6.5 | 1" NPT | 12.75 | N/A | 9.5 | 52.4 | 1002 |
| **95-340TC-4509** | 338.94 | 87 | 425.94 | 2 | 2.06 | 1.75 | 10.69 | 2.13 | 6.5 | 1" NPT | N/A | N/A | 8.9 | 59.3 | 1078 |

# TC Telescopic Cylinders for Pin and Trunnion Mount

## Trunnion Mount

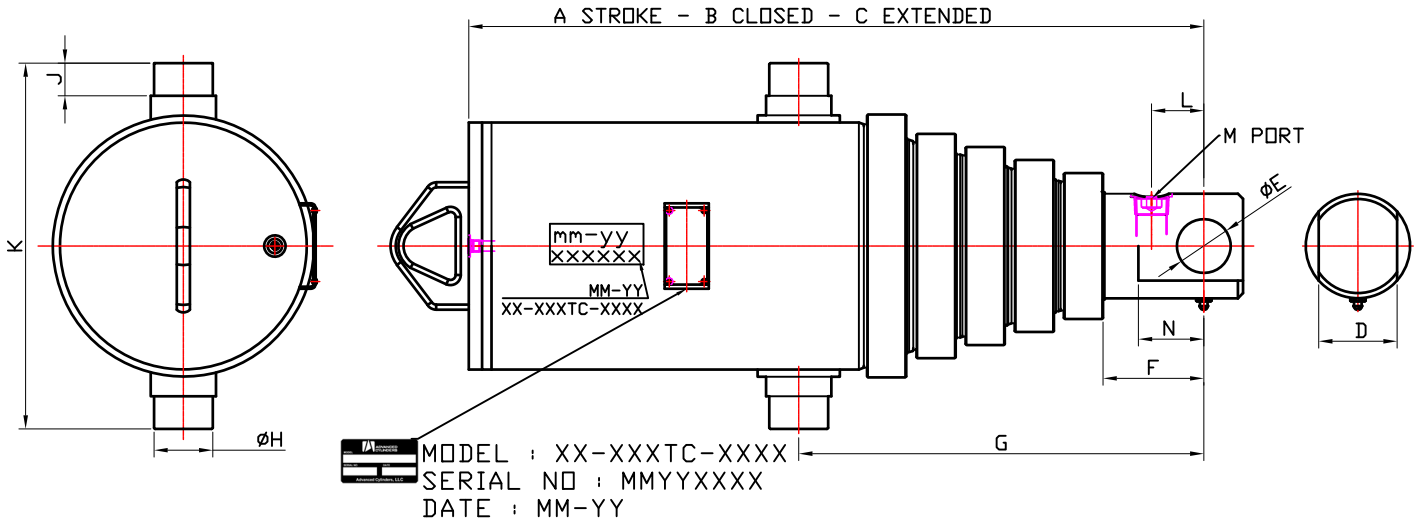


## Available Model Numbers - Trunnion Mount

| TRUNNION MOUNT MODEL NO | A | B | C | D | E | F | G | H | J | K | L | M | N | GAL OF OIL | | WT |
|---|---|---|---|---|---|---|---|---|---|---|---|---|---|---|---|---|
| | IN | IN | IN | IN | IN | IN | IN | IN | IN | IN | IN | PORT | IN | FILL | EXT | LB |
| **63-120TC-4689** | 120.00 | 53.38 | 173.38 | 3.44 | 1.56 | 3.44 | 14.38 | 1.75 | 1.69 | 12.38 | 2 | 1" NPT | N/A | 4.1 | 10.5 | 313 |
| **63-140TC-4689** | 139.88 | 60.00 | 199.88 | 3.44 | 1.56 | 3.44 | 14.38 | 1.75 | 1.69 | 12.38 | 2 | 1" NPT | N/A | 4.7 | 12.2 | 326 |
| **63-150TC-4689** | 150.00 | 63.50 | 213.5 | 3.44 | 1.56 | 3.44 | 14.38 | 1.75 | 1.69 | 12.38 | 2 | 1" NPT | N/A | 5 | 13.1 | 353 |
| **63-168TC-4689** | 168.00 | 69.75 | 237.75 | 3.44 | 1.56 | 3.44 | 14.38 | 1.75 | 1.69 | 12.38 | 2 | 1" NPT | N/A | 5.6 | 14.8 | 390 |
| **85-200TC-4526** | 199.88 | 56.38 | 256.25 | 3.75 | 2.06 | 3.75 | 15.5 | 2.25 | 1.25 | 14 | 2 | 1" NPT | 2.5 | 6.6 | 25.6 | 522 |
| **85-220TC-4526** | 219.88 | 60.38 | 280.25 | 3.75 | 2.06 | 3.75 | 15.5 | 2.25 | 1.25 | 14 | 2 | 1" NPT | 2.5 | 7.3 | 28.2 | 584 |
| **85-235TC-4526** | 234.88 | 65.38 | 300.25 | 3.75 | 2.06 | 3.75 | 15.5 | 2.25 | 1.25 | 14 | 2 | 1" NPT | 2.5 | 7.8 | 30.1 | 644 |
| **85-250TC-4526** | 249.88 | 68.38 | 318.25 | 3.75 | 2.06 | 3.75 | 15.5 | 2.25 | 1.25 | 14 | 2 | 1" NPT | 2.5 | 8.2 | 32 | 692 |
| **85-265TC-4526** | 264.88 | 74.88 | 339.75 | 3.75 | 2.06 | 3.75 | 15.5 | 2.25 | 1.25 | 14 | 2 | 1" NPT | 2.5 | 8.7 | 33.9 | 747 |
| **85-280TC-4526** | 279.88 | 77.88 | 357.75 | 3.75 | 2.06 | 3.75 | 15.5 | 2.25 | 1.25 | 14 | 2 | 1" NPT | 2.5 | 9.2 | 35.8 | 787 |

# TCMH Telescopic Cylinders for Trunnion Mount

## How to Order

6 4 - 180 TCMH - G3

| | |
|---|---|
| 6 | = Nominal OD of Largest Stage |
| 4 | = Number of Stage |
| 180 | = Stroke (inches) |
| TCMH | = Telescopic Cylinder |
| G3 | = Design Code / Series |

## Specifications

Single-Acting with Trunnion Mount Design.

# TCMH Telescopic Cylinders for Trunnion Mount

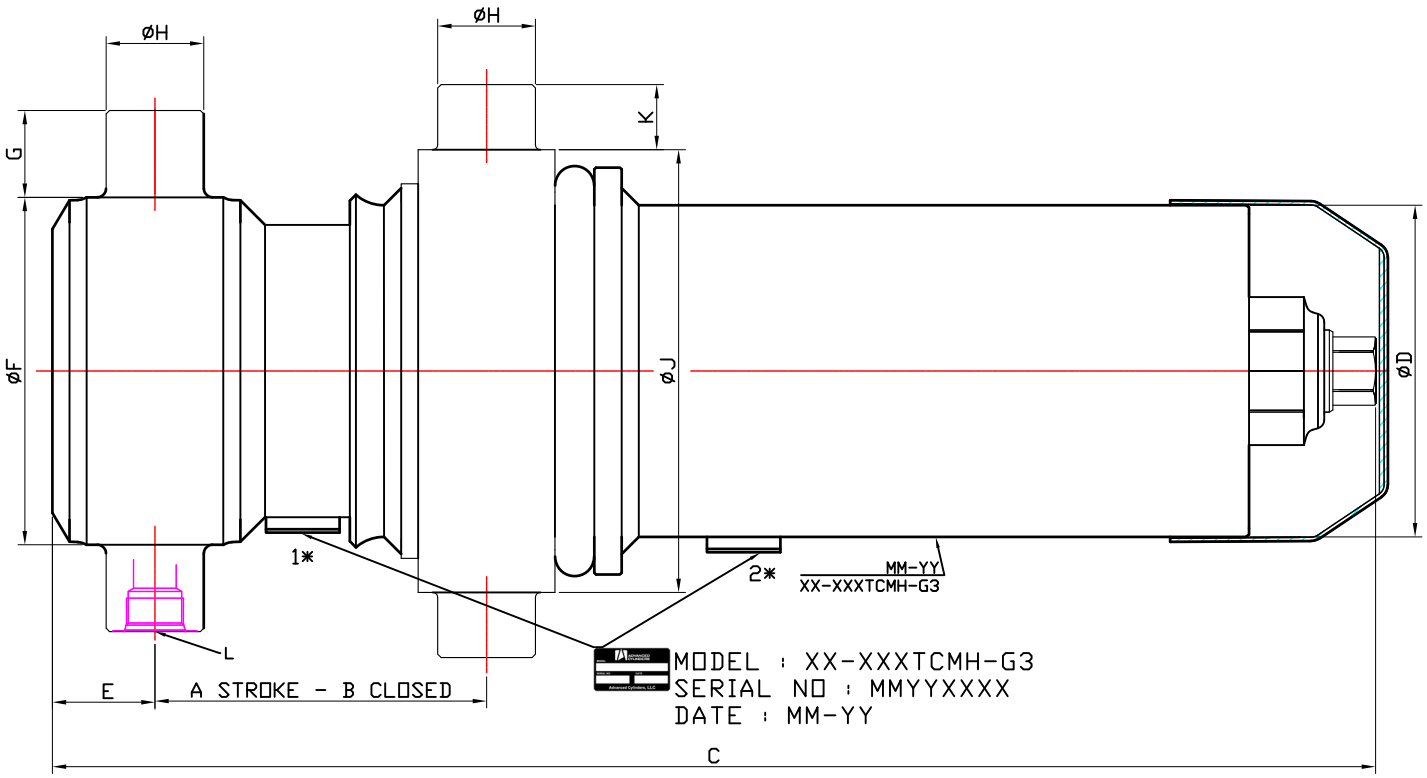


NOTE: 1* - 64-XXXTCMH-G3 NAME PLATE LOCATION
2* - 54-XXXTCMH-G3 NAME PLATE LOCATION
53-XXXTCMH-G3 NAME PLATE LOCATION
43-XXXTCMH-G3 NAME PLATE LOCATION

## Available Model Numbers - Trunnion Mount

| TRUNNION MOUNT MODEL NO | A | B | C | D | E | F | G | H | J | K | L | GAL OF OIL | | WT |
|---|---|---|---|---|---|---|---|---|---|---|---|---|---|---|
| | IN | IN | IN | IN | IN | IN | IN | IN | IN | IN | PORT | FILL | EXT | LB |
| **43-90TCMH-G3** | 90.00 | 5.25 | 44.53 | 6.26 | 1.97 | 5.75 | 2 | 1.87 | 8 | 1.25 | SAE 12 | 0.7 | 5 | 273 |
| **43-110TCMH-G3** | 109.84 | 5.25 | 51.14 | 6.26 | 1.97 | 5.75 | 2 | 1.87 | 8 | 1.25 | SAE 12 | 0.9 | 6 | 286 |
| **53-120TCMH-G3** | 121.26 | 6.25 | 54.57 | 6.61 | 1.97 | 7 | 2 | 1.87 | 9 | 1.25 | SAE 12 | 1.2 | 9.3 | 342 |
| **53-130TCMH-G3** | 129.13 | 6.25 | 57.17 | 6.61 | 1.97 | 7 | 2 | 1.87 | 9 | 1.25 | SAE 12 | 1.3 | 10.1 | 364 |
| **53-140TCMH-G3** | 139.37 | 6.25 | 60.59 | 6.61 | 1.97 | 7 | 2 | 1.87 | 9 | 1.25 | SAE 12 | 1.4 | 10.9 | 385 |
| **54-160TCMH-G3** | 159.84 | 5.50 | 54.88 | 6.61 | 1.97 | 7 | 2 | 1.87 | 9 | 1.25 | SAE 12 | 1.5 | 11.3 | 383 |
| **64-150TCMH-G3** | 150.00 | 7.63 | 51.81 | 7.64 | 2.36 | 8 | 2 | 2.25 | 10.2 | 1.5 | SAE 16 | 1.6 | 13.9 | 438 |
| **64-160TCMH-G3** | 159.84 | 7.63 | 54.29 | 7.64 | 2.36 | 8 | 2 | 2.25 | 10.2 | 1.5 | SAE 16 | 1.7 | 14.9 | 463 |
| **64-170TCMH-G3** | 170.08 | 7.63 | 56.85 | 7.64 | 2.36 | 8 | 2 | 2.25 | 10.2 | 1.5 | SAE 16 | 1.8 | 15.8 | 475 |
| **64-180TCMH-G3** | 179.53 | 7.63 | 59.02 | 7.64 | 2.36 | 8 | 2 | 2.25 | 10.2 | 1.5 | SAE 16 | 1.9 | 16.7 | 503 |

# TC Telescopic Cylinders for 7 Tons and 12 Tons Inverse

## How to Order

33 - 078 TC - 00

| | |
|---|---|
| 33 | = 7 Tons |
| | or |
| 43 | = 12 Tons |
| 78 | = Stroke (inches) |
| TC | = Telescopic Cylinder |
| 00 | = Desisn Code |

## Specifications

Tons Inverse - 7 Tons and 12 Tons
Strokes - 78" ~ 144"

Pressure - 3000 PSI
Ports - SAE Port

## Mounting Accessories

MB7 - 7 Tons Mounting Bracket

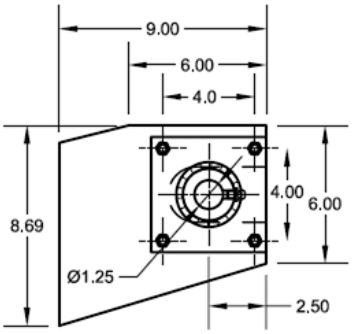

MB12 - 12 Tons Mounting Bracket

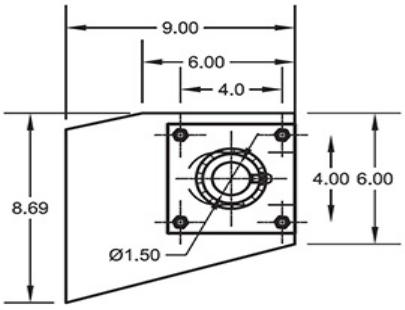


SB0712 - 7 and 12 Tons Support Frame

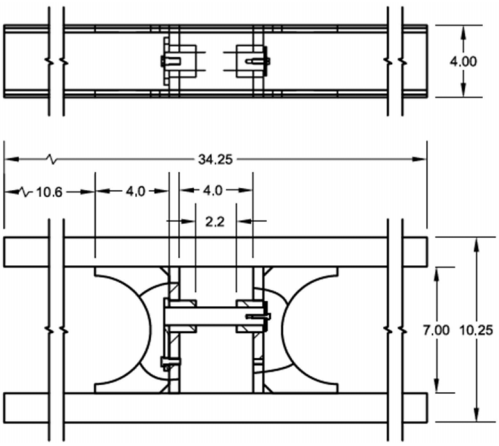

# TC Telescopic Cylinders for 7 Tons and 12 Tons Inverse

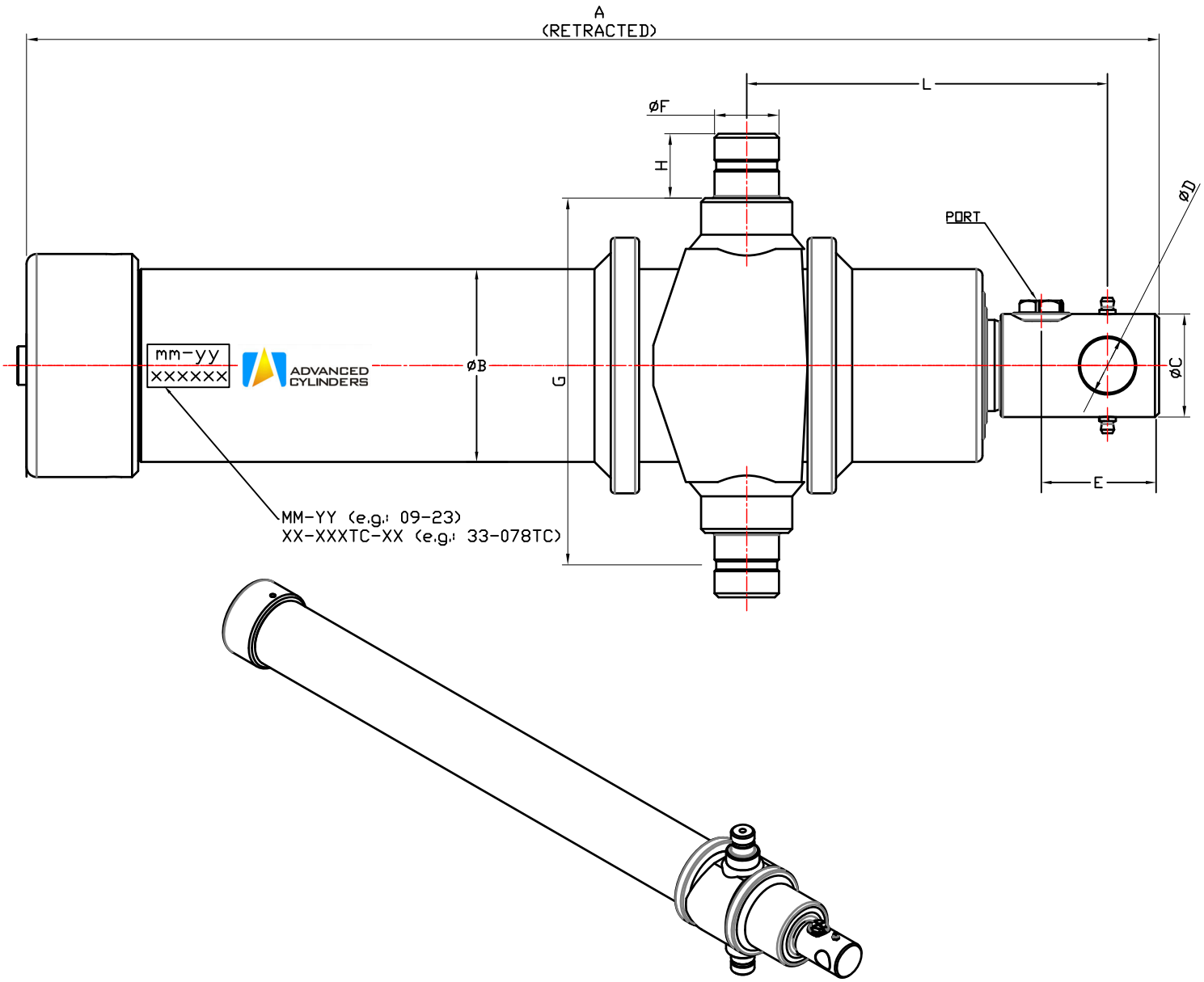


## Available Model Numbers

| MODEL NO | STROKE | A | B | C | D | E | F | G | H | L | PORT | WEIGHT LB | VOLUME GAL |
|---|---|---|---|---|---|---|---|---|---|---|---|---|---|
| **33-078TC** | 78” | 35.5” | 3.75” | 2” | 1.063” | 2.25” | 1.25” | 6.5” | 1.25” | 7” | SAE 8 | 68 | 1.6 |
| **33-090TC** | 90” | 39.5” | 3.75” | 2” | 1.063” | 2.25” | 1.25” | 6.5” | 1.25” | 7” | SAE 8 | 75 | 1.8 |
| **33-108TC** | 108” | 45.5” | 3.75” | 2” | 1.063” | 2.25” | 1.25” | 6.5” | 1.25” | 7” | SAE 8 | 101 | 2.2 |
| **43-078TC** | 78” | 34.75” | 4.4” | 2” | 1.063” | 2.25” | 1.5” | 7.5” | 1.5” | 7” | SAE 8 | 106 | 2.5 |
| **43-090TC** | 90” | 38.75” | 4.4” | 2” | 1.063” | 2.25” | 1.5” | 7.5” | 1.5” | 7” | SAE 8 | 107 | 2.8 |
| **43-108TC** | 108” | 44.75” | 4.4” | 2” | 1.063” | 2.25” | 1.5” | 7.5” | 1.5” | 7” | SAE 8 | 132 | 3.4 |
| **43-120TC** | 120” | 48.75” | 4.4” | 2” | 1.063” | 2.25” | 1.5” | 7.5” | 1.5” | 7” | SAE 8 | 143 | 3.8 |
| **43-144TC** | 144” | 56.78” | 4.4” | 2” | 1.063” | 2.25” | 1.5” | 7.5” | 1.5” | 7” | SAE 8 | 166 | 4.6 |

# Cylinder Ordering Guide

| H | - | MF5 | - | 3.25 | X | 1.38 | X | 25.25 | - | N | - | 1 | - | S | - | 11 | - | S |
|---|---|---|---|---|---|---|---|---|---|---|---|---|---|---|---|---|---|---|
| SERIES | | MOUNT | | BORE | | ROD | | STROKE | | CUSHIONS | | ROD END | | PORTS | | PORT LOCATION | | OPTIONS |

| | | | | | | | | |
|---|---|---|---|---|---|---|---|---|
| H | MX1 | 1.50 | 0.63 | N (None) | 1 (KK Male) | S (SAE) | HEAD | CAP | S (STD) |
| | MX2 | 2.00 | 1.00 | H (Head End) | 2 (KK Female) | N (NPTF) | END | END | X (MODIFIED) * |
| | MX3 | 2.50 | 1.38 | C (Cap End) | 3 (CC Intermediate Male) | | 1 | 1 | |
| | ME5 | 3.25 | 1.75 | B (Both Ends) | | | 2 | 2 | |
| | ME6 | 4.00 | 2.00 | | | | 3 | 3 | |
| | MF1 | 5.00 | 2.50 | | | | 4 | 4 | |
| | MF2 | 6.00 | 3.00 | | | | | | |
| | MF5 | 7.00 | 3.50 | | | | | | |
| | MF6 | 8.00 | 4.00 | | | | | | |
| | MS2 | 10.00 | 4.50 | | | | | | |
| | MS3 | 12.00 | 5.00 | | | | | | |
| | MS4 | 14.00 | 5.50 | | | | | | |
| | MS7 | 16.00 | 7.00 | | | | | | |
| | MT1 | 18.00 | 8.00 | | | | | | |
| | MT2 | 20.00 | 9.00 | | | | | | |
| | MT4 | | 10.00 | | | | | | |
| | MP1 | | | | | | | | |

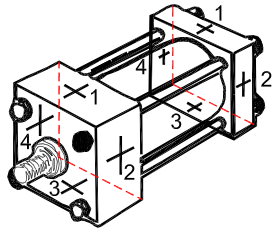


Note: * All modification must be with either complete notes or drawings.

# Standard Specifications

Nominal Pressure - 3000 PSI*
Bore Sizes - 11/2" through 8"
Rod Sizes - 5/8" through 5 1/2"
Mounting Styles - 17 Standard styles***
Strokes - Available in any practical stroke length
Cushions - Optional at either end or both ends

Standard - Externally removable bolted gland assembly
Standard Temperature - -10°F to +200°F**

* If pressure is from 3000 ~ 4000 PSI or higher, specify it during order
** If temperature is from 200 ~ 400°F or higher, specifiy it during order
*** Supplied drawings with all other mounting styles and specials

## Mounting Styles

Tie Rod Extended Both/Head End

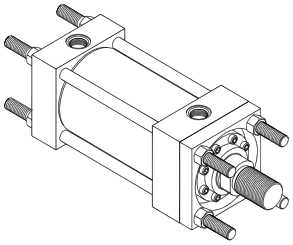

NFPA MX1, MX3 1 1/2"~8"

Tie Rod Extended Cap End

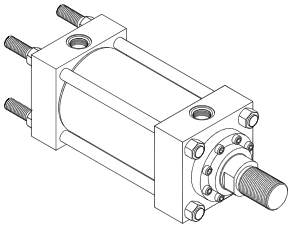

NFPA MX2 1 1/2"~8"

Head Rectangular

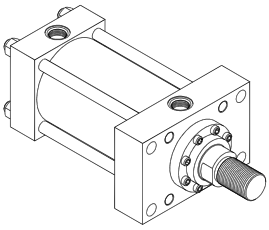

NFPA ME5 1 1/2"~8"

Cap Rectangular

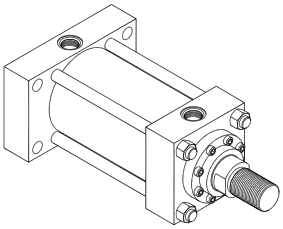

NFPA ME6 1 1/2"~8"

Head Rectangular Flange

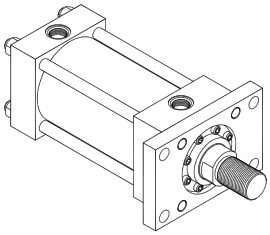

NFPA MF1 1 1/2"~8"

Cap Rectangular Flange

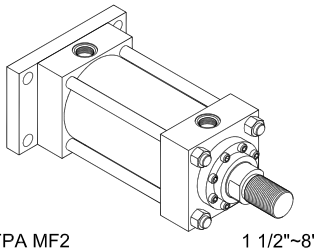

NFPA MF2 1 1/2"~8"

Head Square Flange

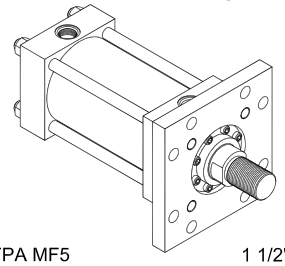

NFPA MF5 1 1/2"~8"

Cap Square Flange

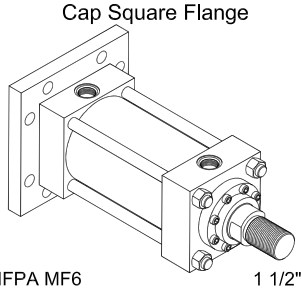

NFPA MF6 1 1/2"~8"

Side Lugs

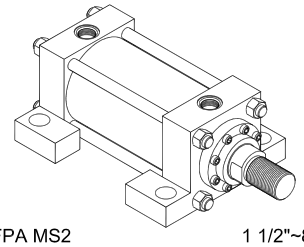

NFPA MS2 1 1/2"~8"

Center-Line Lugs

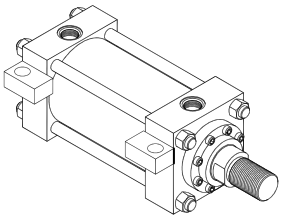

NFPA MS3 1 1/2"~8"

Side Tapped

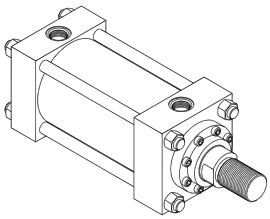

NFPA MS4 1 1/2"~8"

End Lugs

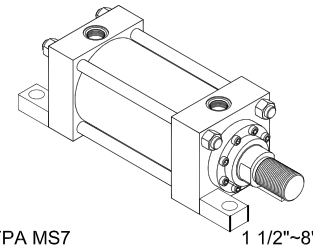

NFPA MS7 1 1/2"~8"

Head Trunnion

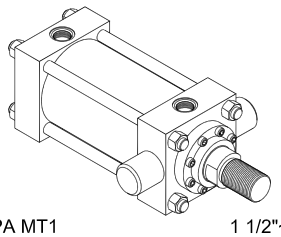

NFPA MT1 1 1/2"~8"

Cap Trunnion

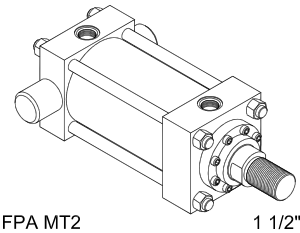

NFPA MT2 1 1/2"~8"

Intermediate Trunnion

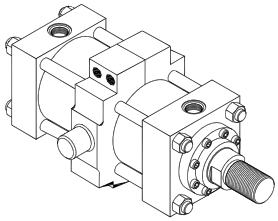

NFPA MT4 1 1/2"~8"

Cap Fixed Clevis

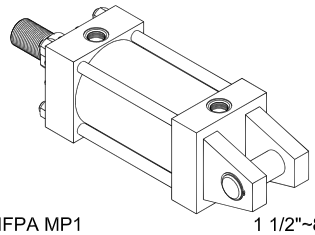

NFPA MP1 1 1/2"~8"

## Rod End Styles

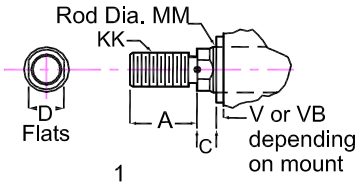


1
KK Male

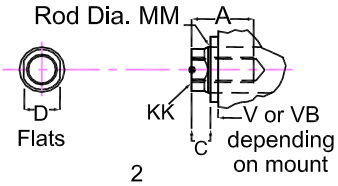


2
KK Female

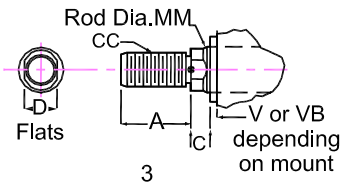


3
CC Intermediate Male

## NFPA MX1 - Tie Rods Extended Both End
## NFPA MX3 - Tie Rods Extended Head End

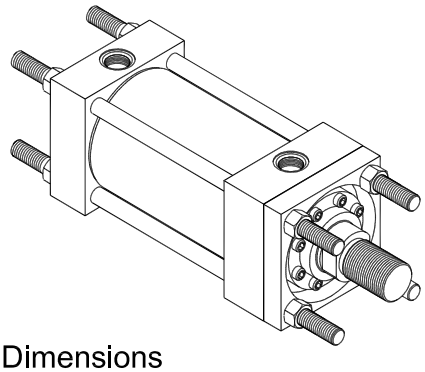

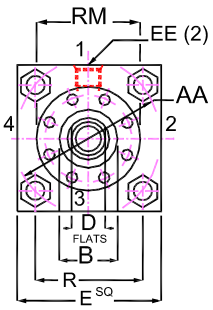


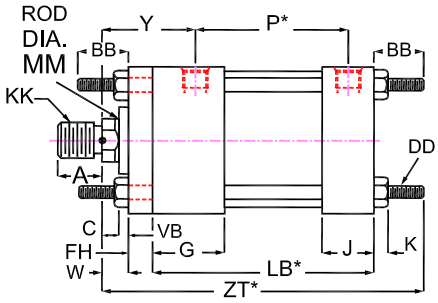


* Add stroke to starred dimension

### Body Dimensions

| BORE | E | EE (SAE) | EE (NPTF) | G | J | K | LB* | P* | AA | BB | DD | FH | R |
|---|---|---|---|---|---|---|---|---|---|---|---|---|---|
| 1 1/2 | 2 1/2 | 8 | 1/2 | 1 3/4 | 1 1/2 | 3/8 | 4 5/8 | 2 11/16 | 2.3 | 1 3/8 | 3/8-24 | 3/8 | 1.63 |
| 2 | 3 | 8 | 1/2 | 1 3/4 | 1 1/2 | 7/16 | 4 5/8 | 2 11/16 | 2.9 | 11 3/16 | 1/2-20 | 5/8 | 2.05 |
| 2 1/2 | 3 1/2 | 8 | 1/2 | 1 3/4 | 1 1/2 | 7/16 | 4 3/4 | 2 13/16 | 3.6 | 11 3/16 | 1/2-20 | 5/8 | 2.55 |
| 3 1/4 | 4 1/2 | 12 | 3/4 | 2 | 1 3/4 | 9/16 | 5 1/2 | 3 9/16 | 4.6 | 2 5/16 | 5/8-18 | 3/4 | 3.25 |
| 4 | 5 | 12 | 3/4 | 2 | 1 3/4 | 9/16 | 5 3/4 | 3 13/16 | 5.4 | 2 5/16 | 5/8-18 | 7/8 | 3.82 |
| 5 | 6 1/2 | 12 | 3/4 | 2 | 1 3/4 | 13/16 | 6 1/4 | 4 5/16 | 7.0 | 3 3/16 | 7/8-14 | 7/8 | 4.95 |
| 6 | 7 1/2 | 16 | 1 | 2 1/4 | 2 1/4 | 15/16 | 7 3/8 | 4 11/16 | 8.1 | 3 5/8 | 1-14 | 1 | 5.73 |
| 7 | 8 1/2 | 20 | 1 1/4 | 2 3/4 | 2 3/4 | 1 | 8 1/2 | 5 1/8 | 9.3 | 4 1/8 | 1 1/8-12 | 1 | 6.58 |
| 8 | 9 1/2 | 24 | 1 1/2 | 3 | 3 | 1 1/8 | 9 1/2 | 5 7/8 | 10.6 | 4 1/2 | 1 1/4-12 | 1 | 7.5 |

### Rod End Dimensions

| BORE | MM | KK | CC | A | B -.001/ -.003 | C | D | RM | VB | W | Y | ZT* |
|---|---|---|---|---|---|---|---|---|---|---|---|---|
| 1 1/2 | 5/8 | 7/16-20 | 1/2-20 | 3/4 | 1 1/8 | 3/8 | 1/2 | 1 15/16 | 1/4 | 5/8 | 2 15/32 | 7 |
| | 1 | 3/4-16 | 7/8-14 | 1 1/8 | 1 1/2 | 1/2 | 7/8 | 2 3/8 | 1/2 | 1 | 2 15/32 | 7 3/8 |
| 2 | 1 | 3/4-16 | 7/8-14 | 1 1/8 | 1 1/2 | 1/2 | 7/8 | 2 3/8 | 1/4 | 3/4 | 2 15/32 | 7 13/16 |
| | 1 3/8 | 1-14 | 1 1/4-12 | 1 5/8 | 2 | 5/8 | 1 1/8 | 2 7/8 | 3/8 | 1 | 2 23/32 | 8 1/16 |
| 2 1/2 | 1 | 3/4-16 | 7/8-14 | 1 1/8 | 1 1/2 | 1/2 | 7/8 | 2 3/8 | 1/4 | 3/4 | 2 15/32 | 7 15/16 |
| | 1 3/8 | 1-14 | 1 1/4-12 | 1 5/8 | 2 | 5/8 | 1 1/8 | 2 7/8 | 3/8 | 1 | 2 23/32 | 8 3/16 |
| | 1 3/4 | 1 1/4-12 | 1 1/2-12 | 2 | 2 3/8 | 3/4 | 1 1/2 | 3 15/32 | 1/2 | 1 1/4 | 2 31/32 | 8 7/16 |
| 3 1/4 | 1 3/8 | 1-14 | 1 1/4-12 | 1 5/8 | 2 | 5/8 | 1 1/8 | 2 7/8 | 1/4 | 7/8 | 2 23/32 | 9 7/16 |
| | 1 3/4 | 1 1/4-12 | 1 1/2-12 | 2 | 2 3/8 | 3/4 | 1 1/2 | 3 15/32 | 3/8 | 1 1/8 | 2 31/32 | 9 11/16 |
| | 2 | 1 1/2-12 | 1 3/4-12 | 2 1/4 | 2 5/8 | 7/8 | 1 11/16 | 3 23/32 | 3/8 | 1 1/4 | 3 3/32 | 9 13/16 |
| 4 | 1 3/4 | 1 1/4-12 | 1 1/2-12 | 2 | 2 3/8 | 3/4 | 1 1/2 | 3 15/32 | 1/4 | 1 | 2 31/32 | 9 15/16 |
| | 2 | 1 1/2-12 | 1 3/4-12 | 2 1/4 | 2 5/8 | 7/8 | 1 11/16 | 3 23/32 | 1/4 | 1 1/8 | 3 3/32 | 10 1/16 |
| | 2 1/2 | 1 7/8-12 | 2 1/4-12 | 3 | 3 1/8 | 1 | 2 1/16 | 4 1/4 | 3/8 | 1 3/8 | 3 11/32 | 10 5/16 |
| 5 | 2 | 1 1/2-12 | 1 3/4-12 | 2 1/4 | 2 5/8 | 7/8 | 1 11/16 | 3 23/32 | 1/4 | 1 1/8 | 3 3/32 | 11 7/16 |
| | 2 1/2 | 1 7/8-12 | 2 1/4-12 | 3 | 3 1/8 | 1 | 2 1/16 | 4 1/4 | 3/8 | 1 3/8 | 3 11/32 | 11 11/16 |
| | 3 | 2 1/4-12 | 2 3/4-12 | 3 1/2 | 3 3/4 | 1 | 2 5/8 | 5 7/16 | 3/8 | 1 3/8 | 3 11/32 | 11 11/16 |
| | 3 1/2 | 2 1/2-12 | 3 1/4-12 | 3 1/2 | 4 1/4 | 1 | 3 | 5 15/16 | 3/8 | 1 3/8 | 3 11/32 | 11 11/16 |
| 6 | 2 1/2 | 1 7/8-12 | 2 1/4-12 | 3 | 3 1/8 | 1 | 2 1/16 | 4 1/4 | 1/4 | 1 1/4 | 3 19/32 | 13 1/4 |
| | 3 | 2 1/4-12 | 2 3/4-12 | 3 1/2 | 3 3/4 | 1 | 2 5/8 | 5 7/16 | 1/4 | 1 1/4 | 3 19/32 | 13 1/4 |
| | 3 1/2 | 2 1/2-12 | 3 1/4-12 | 3 1/2 | 4 1/4 | 1 | 3 | 5 15/16 | 1/4 | 1 1/4 | 3 19/32 | 13 1/4 |
| | 4 | 3-12 | 3 3/4-12 | 4 | 4 3/4 | 1 | 3 3/8 | 6 5/16 | 1/4 | 1 1/4 | 3 19/32 | 13 1/4 |
| 7 | 3 | 2 1/4-12 | 2 3/4-12 | 3 1/2 | 3 3/4 | 1 | 2 5/8 | 5 7/16 | 1/4 | 1 1/4 | 3 15/16 | 14 7/8 |
| | 3 1/2 | 2 1/2-12 | 3 1/4-12 | 3 1/2 | 4 1/4 | 1 | 3 | 5 15/16 | 1/4 | 1 1/4 | 3 15/16 | 14 7/8 |
| | 4 | 3-12 | 3 3/4-12 | 4 | 4 3/4 | 1 | 3 3/8 | 6 5/16 | 1/4 | 1 1/4 | 3 15/16 | 14 7/8 |
| | 4 1/2 | 3 1/4-12 | 4 1/4-12 | 4 1/2 | 5 1/4 | 1 | 3 7/8 | 6 15/16 | 1/4 | 1 1/4 | 3 15/16 | 14 7/8 |
| | 5 | 3 1/2-12 | 4 3/4-12 | 5 | 5 3/4 | 1 | 4 1/4 | 7 7/16 | 1/4 | 1 1/4 | 3 15/16 | 14 7/8 |
| 8 | 3 1/2 | 2 1/2-12 | 3 1/4-12 | 3 1/2 | 4 1/4 | 1 | 3 | 5 15/16 | 1/4 | 1 1/4 | 4 1/16 | 16 1/4 |
| | 4 | 3-12 | 3 3/4-12 | 4 | 4 3/4 | 1 | 3 3/8 | 6 5/16 | 1/4 | 1 1/4 | 4 1/16 | 16 1/4 |
| | 4 1/2 | 3 1/4-12 | 4 1/4-12 | 4 1/2 | 5 1/4 | 1 | 3 7/8 | 6 15/16 | 1/4 | 1 1/4 | 4 1/16 | 16 1/4 |
| | 5 | 3 1/2-12 | 4 3/4-12 | 5 | 5 3/4 | 1 | 4 1/4 | 7 7/16 | 1/4 | 1 1/4 | 4 1/16 | 16 1/4 |
| | 5 1/2 | 4-12 | 5 1/4-12 | 5 1/2 | 6 1/4 | 1 | 4 5/8 | 7 15/16 | 1/4 | 1 1/4 | 4 1/16 | 16 1/4 |

## NFPA MX2 - Tie Rods Extended Cap End

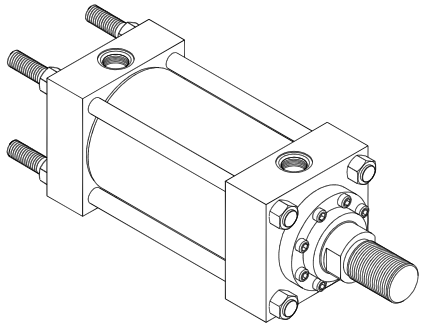

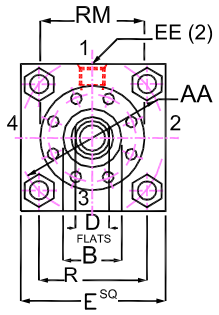


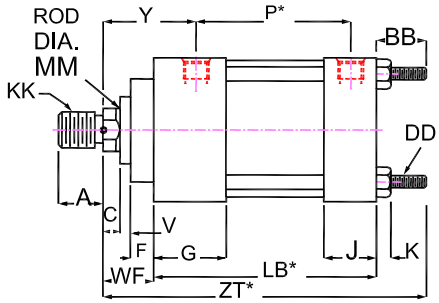


* Add stroke to starred dimension

### Body Dimensions

| BORE | E | EE (SAE) | EE (NPTF) | G | J | K | LB* | P* | AA | BB | DD | R |
|---|---|---|---|---|---|---|---|---|---|---|---|---|
| 1 1/2 | 2 1/2 | 8 | 1/2 | 1 3/4 | 1 1/2 | 3/8 | 4 5/8 | 2 11/16 | 2.3 | 1 3/8 | 3/8-24 | 1.63 |
| 2 | 3 | 8 | 1/2 | 1 3/4 | 1 1/2 | 7/16 | 4 5/8 | 2 11/16 | 2.9 | 11 3/16 | 1/2-20 | 2.05 |
| 2 1/2 | 3 1/2 | 8 | 1/2 | 1 3/4 | 1 1/2 | 7/16 | 4 3/4 | 2 13/16 | 3.6 | 11 3/16 | 1/2-20 | 2.55 |
| 3 1/4 | 4 1/2 | 12 | 3/4 | 2 | 1 3/4 | 9/16 | 5 1/2 | 3 9/16 | 4.6 | 2 5/16 | 5/8-18 | 3.25 |
| 4 | 5 | 12 | 3/4 | 2 | 1 3/4 | 9/16 | 5 3/4 | 3 13/16 | 5.4 | 2 5/16 | 5/8-18 | 3.82 |
| 5 | 6 1/2 | 12 | 3/4 | 2 | 1 3/4 | 13/16 | 6 1/4 | 4 5/16 | 7.0 | 3 3/16 | 7/8-14 | 4.95 |
| 6 | 7 1/2 | 16 | 1 | 2 1/4 | 2 1/4 | 15/16 | 7 3/8 | 4 11/16 | 8.1 | 3 5/8 | 1-14 | 5.73 |
| 7 | 8 1/2 | 20 | 1 1/4 | 2 3/4 | 2 3/4 | 1 | 8 1/2 | 5 1/8 | 9.3 | 4 1/8 | 1 1/8-12 | 6.58 |
| 8 | 9 1/2 | 24 | 1 1/2 | 3 | 3 | 1 1/8 | 9 1/2 | 5 7/8 | 10.6 | 4 1/2 | 1 1/4-12 | 7.5 |

### Rod End Dimensions

| BORE | M M | KK | CC | A | B -.001/ -.003 | C | D | RM | F | V | WF | Y | ZT* |
|---|---|---|---|---|---|---|---|---|---|---|---|---|---|
| 1 1/2 | 5/8 | 7/16-20 | 1/2-20 | 3/4 | 1 1/8 | 3/8 | 1/2 | 1 15/16 | 3/8 | 1/4 | 1 | 2 15/32 | 7 |
| | 1 | 3/4-16 | 7/8-14 | 1 1/8 | 1 1/2 | 1/2 | 7/8 | 2 3/8 | 3/8 | 1/2 | 1 3/8 | 2 15/32 | 7 3/8 |
| 2 | 1 | 3/4-16 | 7/8-14 | 1 1/8 | 1 1/2 | 1/2 | 7/8 | 2 3/8 | 3/8 | 1/4 | 1 3/8 | 2 15/32 | 7 13/16 |
| | 1 3/8 | 1-14 | 1 1/4-12 | 1 5/8 | 2 | 5/8 | 1 1/8 | 2 7/8 | 3/8 | 3/8 | 1 5/8 | 2 23/32 | 8 1/16 |
| 2 1/2 | 1 | 3/4-16 | 7/8-14 | 1 1/8 | 1 1/2 | 1/2 | 7/8 | 2 3/8 | 3/8 | 3/8 | 1 3/8 | 2 15/32 | 7 15/16 |
| | 1 3/8 | 1-14 | 1 1/4-12 | 1 5/8 | 2 | 5/8 | 1 1/8 | 2 7/8 | 3/8 | 3/8 | 1 5/8 | 2 23/32 | 8 3/16 |
| | 1 3/4 | 1 1/4-12 | 1 1/2-12 | 2 | 2 3/8 | 3/4 | 1 1/2 | 3 15/32 | 5/8 | 1/2 | 1 7/8 | 2 31/32 | 8 7/16 |
| 3 1/4 | 1 3/8 | 1-14 | 1 1/4-12 | 1 5/8 | 2 | 5/8 | 1 1/8 | 2 7/8 | 3/8 | 13/32 | 1 5/8 | 2 23/32 | 9 7/16 |
| | 1 3/4 | 1 1/4-12 | 1 1/2-12 | 2 | 2 3/8 | 3/4 | 1 1/2 | 3 15/32 | 5/8 | 3/8 | 1 7/8 | 2 31/32 | 9 11/16 |
| | 2 | 1 1/2-12 | 1 3/4-12 | 2 1/4 | 2 5/8 | 7/8 | 1 11/16 | 3 23/32 | 5/8 | 3/8 | 2 | 3 3/32 | 9 13/16 |
| 4 | 1 3/4 | 1 1/4-12 | 1 1/2-12 | 2 | 2 3/8 | 3/4 | 1 1/2 | 3 15/32 | 5/8 | 17/32 | 1 7/8 | 2 31/32 | 9 15/16 |
| | 2 | 1 1/2-12 | 1 3/4-12 | 2 1/4 | 2 5/8 | 7/8 | 1 11/16 | 3 23/32 | 5/8 | 17/32 | 2 | 3 3/32 | 10 1/16 |
| | 2 1/2 | 1 7/8-12 | 2 1/4-12 | 3 | 3 1/8 | 1 | 2 1/16 | 4 1/4 | 5/8 | 21/32 | 2 1/4 | 3 11/32 | 10 5/16 |
| 5 | 2 | 1 1/2-12 | 1 3/4-12 | 2 1/4 | 2 5/8 | 7/8 | 1 11/16 | 3 23/32 | 5/8 | 17/32 | 2 | 3 3/32 | 11 7/16 |
| | 2 1/2 | 1 7/8-12 | 2 1/4-12 | 3 | 3 1/8 | 1 | 2 1/16 | 4 1/4 | 5/8 | 21/32 | 2 1/4 | 3 11/32 | 11 11/16 |
| | 3 | 2 1/4-12 | 2 3/4-12 | 3 1/2 | 3 3/4 | 1 | 2 5/8 | 5 7/16 | 7/8 | 17/32 | 2 1/4 | 3 11/32 | 11 11/16 |
| | 3 1/2 | 2 1/2-12 | 3 1/4-12 | 3 1/2 | 4 1/4 | 1 | 3 | 5 15/16 | 15/16 | 17/32 | 2 1/4 | 3 11/32 | 11 11/16 |
| 6 | 2 1/2 | 1 7/8-12 | 2 1/4-12 | 3 | 3 1/8 | 1 | 2 1/16 | 4 1/4 | 5/8 | 21/32 | 2 1/4 | 3 19/32 | 13 1/4 |
| | 3 | 2 1/4-12 | 2 3/4-12 | 3 1/2 | 3 3/4 | 1 | 2 5/8 | 5 7/16 | 7/8 | 17/32 | 2 1/4 | 3 19/32 | 13 1/4 |
| | 3 1/2 | 2 1/2-12 | 3 1/4-12 | 3 1/2 | 4 1/4 | 1 | 3 | 5 15/16 | 15/16 | 17/32 | 2 1/4 | 3 19/32 | 13 1/4 |
| | 4 | 3-12 | 3 3/4-12 | 4 | 4 3/4 | 1 | 3 3/8 | 6 5/16 | 15/16 | 3/8 | 2 1/4 | 3 19/32 | 13 1/4 |
| 7 | 3 | 2 1/4-12 | 2 3/4-12 | 3 1/2 | 3 3/4 | 1 | 2 5/8 | 5 7/16 | 7/8 | 17/32 | 2 1/4 | 3 15/16 | 14 7/8 |
| | 3 1/2 | 2 1/2-12 | 3 1/4-12 | 3 1/2 | 4 1/4 | 1 | 3 | 5 15/16 | 15/16 | 17/32 | 2 1/4 | 3 15/16 | 14 7/8 |
| | 4 | 3-12 | 3 3/4-12 | 4 | 4 3/4 | 1 | 3 3/8 | 6 5/16 | 15/16 | 3/8 | 2 1/4 | 3 15/16 | 14 7/8 |
| | 4 1/2 | 3 1/4-12 | 4 1/4-12 | 4 1/2 | 5 1/4 | 1 | 3 7/8 | 6 15/16 | 15/16 | 3/8 | 2 1/4 | 3 15/16 | 14 7/8 |
| | 5 | 3 1/2-12 | 4 3/4-12 | 5 | 5 3/4 | 1 | 4 1/4 | 7 7/16 | 15/16 | 3/8 | 2 1/4 | 3 15/16 | 14 7/8 |
| 8 | 3 1/2 | 2 1/2-12 | 3 1/4-12 | 3 1/2 | 4 1/4 | 1 | 3 | 5 15/16 | 15/16 | 17/32 | 2 1/4 | 4 1/16 | 16 1/4 |
| | 4 | 3-12 | 3 3/4-12 | 4 | 4 3/4 | 1 | 3 3/8 | 6 5/16 | 15/16 | 3/8 | 2 1/4 | 4 1/16 | 16 1/4 |
| | 4 1/2 | 3 1/4-12 | 4 1/4-12 | 4 1/2 | 5 1/4 | 1 | 3 7/8 | 6 15/16 | 15/16 | 3/8 | 2 1/4 | 4 1/16 | 16 1/4 |
| | 5 | 3 1/2-12 | 4 3/4-12 | 5 | 5 3/4 | 1 | 4 1/4 | 7 7/16 | 15/16 | 3/8 | 2 1/4 | 4 1/16 | 16 1/4 |
| | 5 1/2 | 4-12 | 5 1/4-12 | 5 1/2 | 6 1/4 | 1 | 4 5/8 | 7 15/16 | 15/16 | 3/8 | 2 1/4 | 4 1/16 | 16 1/4 |

## NFPA ME5 - Head Rectangular

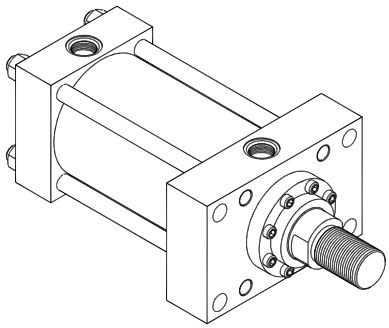

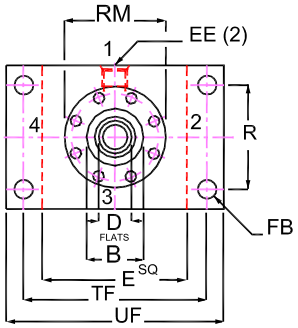


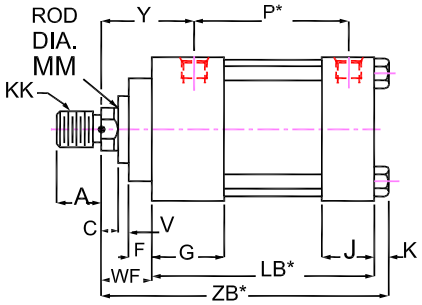


* Add stroke to starred dimension

### Body Dimensions

| BORE | E | EE (SAE) | EE (NPTF) | G | J | K | LB* | P* | FB | R | TF | UF |
|---|---|---|---|---|---|---|---|---|---|---|---|---|
| 1 1/2 | 2 1/2 | 8 | 1/2 | 1 3/4 | 1 1/2 | 3/8 | 4 5/8 | 2 11/16 | 7/16 | 1.63 | 3 7/16 | 4 1/4 |
| 2 | 3 | 8 | 1/2 | 1 3/4 | 1 1/2 | 7/16 | 4 5/8 | 2 11/16 | 9/16 | 2.05 | 4 1/8 | 5 1/8 |
| 2 1/2 | 3 1/2 | 8 | 1/2 | 1 3/4 | 1 1/2 | 7/16 | 4 3/4 | 2 13/16 | 9/16 | 2.55 | 4 5/8 | 5 5/8 |
| 3 1/4 | 4 1/2 | 12 | 3/4 | 2 | 1 3/4 | 9/16 | 5 1/2 | 3 9/16 | 11/16 | 3.25 | 5 7/8 | 7 1/8 |
| 4 | 5 | 12 | 3/4 | 2 | 1 3/4 | 9/16 | 5 3/4 | 3 13/16 | 11/16 | 3.82 | 6 3/8 | 7 5/8 |
| 5 | 6 1/2 | 12 | 3/4 | 2 | 1 3/4 | 13/16 | 6 1/4 | 4 5/16 | 15/16 | 4.95 | 8 3/16 | 9 3/4 |
| 6 | 7 1/2 | 16 | 1 | 2 1/4 | 2 1/4 | 15/16 | 7 3/8 | 4 11/16 | 1 1/16 | 5.73 | 9 7/16 | 11 1/4 |
| 7 | 8 1/2 | 20 | 1 1/4 | 2 3/4 | 2 3/4 | 1 | 8 1/2 | 5 1/8 | 1 3/16 | 6.58 | 10 5/8 | 12 5/8 |
| 8 | 9 1/2 | 24 | 1 1/2 | 3 | 3 | 1 1/8 | 9 1/2 | 5 7/8 | 1 5/16 | 7.5 | 11 13/16 | 14 |

### Rod End Dimensions

| BORE | MM | KK | CC | A | B -.001/ -.003 | C | D | RM | F | V | WF | Y | ZB* |
|---|---|---|---|---|---|---|---|---|---|---|---|---|---|
| 1 1/2 | 5/8 | 7/16-20 | 1/2-20 | 3/4 | 1 1/8 | 3/8 | 1/2 | 1 15/16 | 3/8 | 1/4 | 1 | 2 15/32 | 6 |
| | 1 | 3/4-16 | 7/8-14 | 1 1/8 | 1 1/2 | 1/2 | 7/8 | 2 3/8 | 3/8 | 1/2 | 1 3/8 | 2 15/32 | 6 3/8 |
| 2 | 1 | 3/4-16 | 7/8-14 | 1 1/8 | 1 1/2 | 1/2 | 7/8 | 2 3/8 | 3/8 | 1/4 | 1 3/8 | 2 15/32 | 6 7/16 |
| | 1 3/8 | 1-14 | 1 1/4-12 | 1 5/8 | 2 | 5/8 | 1 1/8 | 2 7/8 | 3/8 | 3/8 | 1 5/8 | 2 23/32 | 6 11/16 |
| 2 1/2 | 1 | 3/4-16 | 7/8-14 | 1 1/8 | 1 1/2 | 1/2 | 7/8 | 2 3/8 | 3/8 | 3/8 | 1 3/8 | 2 15/32 | 6 9/16 |
| | 1 3/8 | 1-14 | 1 1/4-12 | 1 5/8 | 2 | 5/8 | 1 1/8 | 2 7/8 | 3/8 | 3/8 | 1 5/8 | 2 23/32 | 6 13/16 |
| | 1 3/4 | 1 1/4-12 | 1 1/2-12 | 2 | 2 3/8 | 3/4 | 1 1/2 | 3 15/32 | 5/8 | 1/2 | 1 7/8 | 2 31/32 | 7 1/16 |
| 3 1/4 | 1 3/8 | 1-14 | 1 1/4-12 | 1 5/8 | 2 | 5/8 | 1 1/8 | 2 7/8 | 3/8 | 13/32 | 1 5/8 | 2 23/32 | 7 11/16 |
| | 1 3/4 | 1 1/4-12 | 1 1/2-12 | 2 | 2 3/8 | 3/4 | 1 1/2 | 3 15/32 | 5/8 | 3/8 | 1 7/8 | 2 31/32 | 7 15/16 |
| | 2 | 1 1/2-12 | 1 3/4-12 | 2 1/4 | 2 5/8 | 7/8 | 1 11/16 | 3 23/32 | 5/8 | 3/8 | 2 | 3 3/32 | 8 1/16 |
| 4 | 1 3/4 | 1 1/4-12 | 1 1/2-12 | 2 | 2 3/8 | 3/4 | 1 1/2 | 3 15/32 | 5/8 | 17/32 | 1 7/8 | 2 31/32 | 8 3/16 |
| | 2 | 1 1/2-12 | 1 3/4-12 | 2 1/4 | 2 5/8 | 7/8 | 1 11/16 | 3 23/32 | 5/8 | 17/32 | 2 | 3 3/32 | 8 5/16 |
| | 2 1/2 | 1 7/8-12 | 2 1/4-12 | 3 | 3 1/8 | 1 | 2 1/16 | 4 1/4 | 5/8 | 21/32 | 2 1/4 | 3 11/32 | 8 9/16 |
| 5 | 2 | 1 1/2-12 | 1 3/4-12 | 2 1/4 | 2 5/8 | 7/8 | 1 11/16 | 3 23/32 | 5/8 | 17/32 | 2 | 3 3/32 | 9 1/16 |
| | 2 1/2 | 1 7/8-12 | 2 1/4-12 | 3 | 3 1/8 | 1 | 2 1/16 | 4 1/4 | 5/8 | 21/32 | 2 1/4 | 3 11/32 | 9 5/16 |
| | 3 | 2 1/4-12 | 2 3/4-12 | 3 1/2 | 3 3/4 | 1 | 2 5/8 | 5 7/16 | 7/8 | 17/32 | 2 1/4 | 3 11/32 | 9 5/16 |
| | 3 1/2 | 2 1/2-12 | 3 1/4-12 | 3 1/2 | 4 1/4 | 1 | 3 | 5 15/16 | 15/16 | 17/32 | 2 1/4 | 3 11/32 | 9 5/16 |
| 6 | 2 1/2 | 1 7/8-12 | 2 1/4-12 | 3 | 3 1/8 | 1 | 2 1/16 | 4 1/4 | 5/8 | 21/32 | 2 1/4 | 3 19/32 | 10 9/16 |
| | 3 | 2 1/4-12 | 2 3/4-12 | 3 1/2 | 3 3/4 | 1 | 2 5/8 | 5 7/16 | 7/8 | 17/32 | 2 1/4 | 3 19/32 | 10 9/16 |
| | 3 1/2 | 2 1/2-12 | 3 1/4-12 | 3 1/2 | 4 1/4 | 1 | 3 | 5 15/16 | 15/16 | 17/32 | 2 1/4 | 3 19/32 | 10 9/16 |
| | 4 | 3-12 | 3 3/4-12 | 4 | 4 3/4 | 1 | 3 3/8 | 6 5/16 | 15/16 | 3/8 | 2 1/4 | 3 19/32 | 10 9/16 |
| 7 | 3 | 2 1/4-12 | 2 3/4-12 | 3 1/2 | 3 3/4 | 1 | 2 5/8 | 5 7/16 | 7/8 | 17/32 | 2 1/4 | 3 15/16 | 11 3/4 |
| | 3 1/2 | 2 1/2-12 | 3 1/4-12 | 3 1/2 | 4 1/4 | 1 | 3 | 5 15/16 | 15/16 | 17/32 | 2 1/4 | 3 15/16 | 11 3/4 |
| | 4 | 3-12 | 3 3/4-12 | 4 | 4 3/4 | 1 | 3 3/8 | 6 5/16 | 15/16 | 3/8 | 2 1/4 | 3 15/16 | 11 3/4 |
| | 4 1/2 | 3 1/4-12 | 4 1/4-12 | 4 1/2 | 5 1/4 | 1 | 3 7/8 | 6 15/16 | 15/16 | 3/8 | 2 1/4 | 3 15/16 | 11 3/4 |
| | 5 | 3 1/2-12 | 4 3/4-12 | 5 | 5 3/4 | 1 | 4 1/4 | 7 7/16 | 15/16 | 3/8 | 2 1/4 | 3 15/16 | 11 3/4 |
| 8 | 3 1/2 | 2 1/2-12 | 3 1/4-12 | 3 1/2 | 4 1/4 | 1 | 3 | 5 15/16 | 15/16 | 17/32 | 2 1/4 | 4 1/16 | 12 7/8 |
| | 4 | 3-12 | 3 3/4-12 | 4 | 4 3/4 | 1 | 3 3/8 | 6 5/16 | 15/16 | 3/8 | 2 1/4 | 4 1/16 | 12 7/8 |
| | 4 1/2 | 3 1/4-12 | 4 1/4-12 | 4 1/2 | 5 1/4 | 1 | 3 7/8 | 6 15/16 | 15/16 | 3/8 | 2 1/4 | 4 1/16 | 12 7/8 |
| | 5 | 3 1/2-12 | 4 3/4-12 | 5 | 5 3/4 | 1 | 4 1/4 | 7 7/16 | 15/16 | 3/8 | 2 1/4 | 4 1/16 | 12 7/8 |
| | 5 1/2 | 4-12 | 5 1/4-12 | 5 1/2 | 6 1/4 | 1 | 4 5/8 | 7 15/16 | 15/16 | 3/8 | 2 1/4 | 4 1/16 | 12 7/8 |

## NFPA ME6 - Cap Rectangular

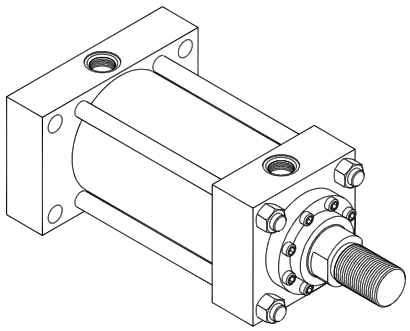

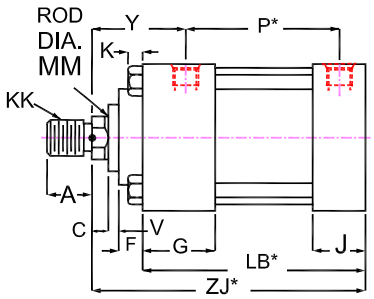


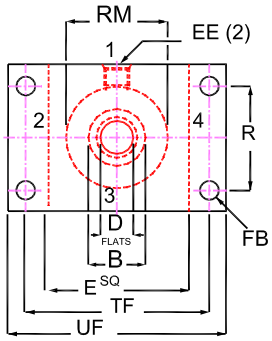


* Add stroke to starred dimension

### Body Dimensions

| BORE | E | EE (SAE) | EE (NPTF) | G | J | K | LB* | P* | FB | R | TF | UF |
|---|---|---|---|---|---|---|---|---|---|---|---|---|
| 1 1/2 | 2 1/2 | 8 | 1/2 | 1 3/4 | 1 1/2 | 3/8 | 4 5/8 | 2 11/16 | 7/16 | 1.63 | 3 7/16 | 4 1/4 |
| 2 | 3 | 8 | 1/2 | 1 3/4 | 1 1/2 | 7/16 | 4 5/8 | 2 11/16 | 9/16 | 2.05 | 4 1/8 | 5 1/8 |
| 2 1/2 | 3 1/2 | 8 | 1/2 | 1 3/4 | 1 1/2 | 7/16 | 4 3/4 | 2 13/16 | 9/16 | 2.55 | 4 5/8 | 5 5/8 |
| 3 1/4 | 4 1/2 | 12 | 3/4 | 2 | 1 3/4 | 9/16 | 5 1/2 | 3 9/16 | 11/16 | 3.25 | 5 7/8 | 7 1/8 |
| 4 | 5 | 12 | 3/4 | 2 | 1 3/4 | 9/16 | 5 3/4 | 3 13/16 | 11/16 | 3.82 | 6 3/8 | 7 5/8 |
| 5 | 6 1/2 | 12 | 3/4 | 2 | 1 3/4 | 13/16 | 6 1/4 | 4 5/16 | 15/16 | 4.95 | 8 3/16 | 9 3/4 |
| 6 | 7 1/2 | 16 | 1 | 2 1/4 | 2 1/4 | 15/16 | 7 3/8 | 4 11/16 | 1 1/16 | 5.73 | 9 7/16 | 11 1/4 |
| 7 | 8 1/2 | 20 | 1 1/4 | 2 3/4 | 2 3/4 | 1 | 8 1/2 | 5 1/8 | 1 3/16 | 6.58 | 10 5/8 | 12 5/8 |
| 8 | 9 1/2 | 24 | 1 1/2 | 3 | 3 | 1 1/8 | 9 1/2 | 5 7/8 | 1 5/16 | 7.5 | 11 13/16 | 14 |

### Rod End Dimensions

| BORE | MM | KK | CC | A | B -.001/ -.003 | C | D | RM | F | V | Y | ZJ * |
|---|---|---|---|---|---|---|---|---|---|---|---|---|
| 1 1/2 | 5/8 | 7/16-20 | 1/2-20 | 3/4 | 1 1/8 | 3/8 | 1/2 | 1 15/16 | 3/8 | 1/4 | 2 15/32 | 5 5/8 |
| | 1 | 3/4-16 | 7/8-14 | 1 1/8 | 1 1/2 | 1/2 | 7/8 | 2 3/8 | 3/8 | 1/2 | 2 15/32 | 6 |
| 2 | 1 | 3/4-16 | 7/8-14 | 1 1/8 | 1 1/2 | 1/2 | 7/8 | 2 3/8 | 3/8 | 1/4 | 2 15/32 | 6 |
| | 1 3/8 | 1-14 | 1 1/4-12 | 1 5/8 | 2 | 5/8 | 1 1/8 | 2 7/8 | 3/8 | 3/8 | 2 23/32 | 6 1/4 |
| 2 1/2 | 1 | 3/4-16 | 7/8-14 | 1 1/8 | 1 1/2 | 1/2 | 7/8 | 2 3/8 | 3/8 | 3/8 | 2 15/32 | 6 1/8 |
| | 1 3/8 | 1-14 | 1 1/4-12 | 1 5/8 | 2 | 5/8 | 1 1/8 | 2 7/8 | 3/8 | 3/8 | 2 23/32 | 6 3/8 |
| | 1 3/4 | 1 1/4-12 | 1 1/2-12 | 2 | 2 3/8 | 3/4 | 1 1/2 | 3 15/32 | 5/8 | 1/2 | 2 31/32 | 6 5/8 |
| 3 1/4 | 1 3/8 | 1-14 | 1 1/4-12 | 1 5/8 | 2 | 5/8 | 1 1/8 | 2 7/8 | 3/8 | 13/32 | 2 23/32 | 7 1/8 |
| | 1 3/4 | 1 1/4-12 | 1 1/2-12 | 2 | 2 3/8 | 3/4 | 1 1/2 | 3 15/32 | 5/8 | 3/8 | 2 31/32 | 7 3/8 |
| | 2 | 1 1/2-12 | 1 3/4-12 | 2 1/4 | 2 5/8 | 7/8 | 1 11/16 | 3 23/32 | 5/8 | 3/8 | 3 3/32 | 7 1/2 |
| 4 | 1 3/4 | 1 1/4-12 | 1 1/2-12 | 2 | 2 3/8 | 3/4 | 1 1/2 | 3 15/32 | 5/8 | 17/32 | 2 31/32 | 7 5/8 |
| | 2 | 1 1/2-12 | 1 3/4-12 | 2 1/4 | 2 5/8 | 7/8 | 1 11/16 | 3 23/32 | 5/8 | 17/32 | 3 3/32 | 7 3/4 |
| | 2 1/2 | 1 7/8-12 | 2 1/4-12 | 3 | 3 1/8 | 1 | 2 1/16 | 4 1/4 | 5/8 | 21/32 | 3 11/32 | 8 |
| 5 | 2 | 1 1/2-12 | 1 3/4-12 | 2 1/4 | 2 5/8 | 7/8 | 1 11/16 | 3 23/32 | 5/8 | 17/32 | 3 3/32 | 8 1/4 |
| | 2 1/2 | 1 7/8-12 | 2 1/4-12 | 3 | 3 1/8 | 1 | 2 1/16 | 4 1/4 | 5/8 | 21/32 | 3 11/32 | 8 1/2 |
| | 3 | 2 1/4-12 | 2 3/4-12 | 3 1/2 | 3 3/4 | 1 | 2 5/8 | 5 7/16 | 7/8 | 17/32 | 3 11/32 | 8 1/2 |
| | 3 1/2 | 2 1/2-12 | 3 1/4-12 | 3 1/2 | 4 1/4 | 1 | 3 | 5 15/16 | 15/16 | 17/32 | 3 11/32 | 8 1/2 |
| 6 | 2 1/2 | 1 7/8-12 | 2 1/4-12 | 3 | 3 1/8 | 1 | 2 1/16 | 4 1/4 | 5/8 | 21/32 | 3 19/32 | 9 5/8 |
| | 3 | 2 1/4-12 | 2 3/4-12 | 3 1/2 | 3 3/4 | 1 | 2 5/8 | 5 7/16 | 7/8 | 17/32 | 3 19/32 | 9 5/8 |
| | 3 1/2 | 2 1/2-12 | 3 1/4-12 | 3 1/2 | 4 1/4 | 1 | 3 | 5 15/16 | 15/16 | 17/32 | 3 19/32 | 9 5/8 |
| | 4 | 3-12 | 3 3/4-12 | 4 | 4 3/4 | 1 | 3 3/8 | 6 5/16 | 15/16 | 3/8 | 3 19/32 | 9 5/8 |
| 7 | 3 | 2 1/4-12 | 2 3/4-12 | 3 1/2 | 3 3/4 | 1 | 2 5/8 | 5 7/16 | 7/8 | 17/32 | 3 15/16 | 10 3/4 |
| | 3 1/2 | 2 1/2-12 | 3 1/4-12 | 3 1/2 | 4 1/4 | 1 | 3 | 5 15/16 | 15/16 | 17/32 | 3 15/16 | 10 3/4 |
| | 4 | 3-12 | 3 3/4-12 | 4 | 4 3/4 | 1 | 3 3/8 | 6 5/16 | 15/16 | 3/8 | 3 15/16 | 10 3/4 |
| | 4 1/2 | 3 1/4-12 | 4 1/4-12 | 4 1/2 | 5 1/4 | 1 | 3 7/8 | 6 15/16 | 15/16 | 3/8 | 3 15/16 | 10 3/4 |
| | 5 | 3 1/2-12 | 4 3/4-12 | 5 | 5 3/4 | 1 | 4 1/4 | 7 7/16 | 15/16 | 3/8 | 3 15/16 | 10 3/4 |
| 8 | 3 1/2 | 2 1/2-12 | 3 1/4-12 | 3 1/2 | 4 1/4 | 1 | 3 | 5 15/16 | 15/16 | 17/32 | 4 1/16 | 11 3/4 |
| | 4 | 3-12 | 3 3/4-12 | 4 | 4 3/4 | 1 | 3 3/8 | 6 5/16 | 15/16 | 3/8 | 4 1/16 | 11 3/4 |
| | 4 1/2 | 3 1/4-12 | 4 1/4-12 | 4 1/2 | 5 1/4 | 1 | 3 7/8 | 6 15/16 | 15/16 | 3/8 | 4 1/16 | 11 3/4 |
| | 5 | 3 1/2-12 | 4 3/4-12 | 5 | 5 3/4 | 1 | 4 1/4 | 7 7/16 | 15/16 | 3/8 | 4 1/16 | 11 3/4 |
| | 5 1/2 | 4-12 | 5 1/4-12 | 5 1/2 | 6 1/4 | 1 | 4 5/8 | 7 15/16 | 15/16 | 3/8 | 4 1/16 | 11 3/4 |

## NFPA MF1 - Head Rectangular Flange

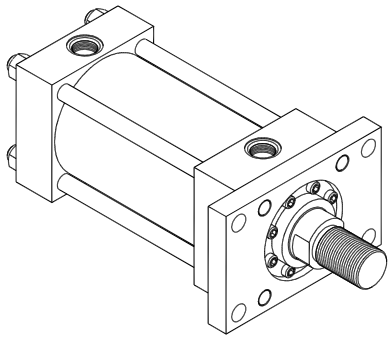

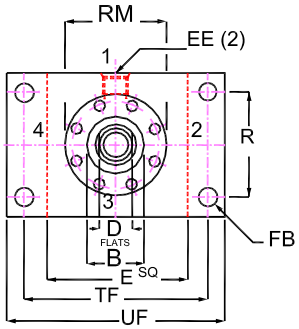


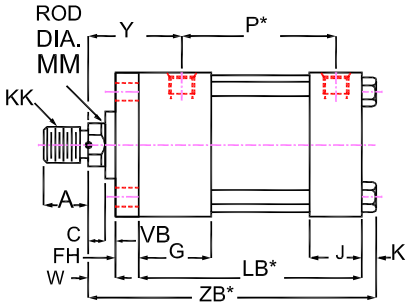


* Add stroke to starred dimension

### Body Dimensions

| BORE | E | EE (SAE) | EE (NPTF) | G | J | K | LB* | P* | FB | FH | R | TF | UF |
|---|---|---|---|---|---|---|---|---|---|---|---|---|---|
| 1 1/2 | 2 1/2 | 8 | 1/2 | 1 3/4 | 1 1/2 | 3/8 | 4 5/8 | 2 11/16 | 7/16 | 3/8 | 1.63 | 3 7/16 | 4 1/4 |
| 2 | 3 | 8 | 1/2 | 1 3/4 | 1 1/2 | 7/16 | 4 5/8 | 2 11/16 | 9/16 | 5/8 | 2.05 | 4 1/8 | 5 1/8 |
| 2 1/2 | 3 1/2 | 8 | 1/2 | 1 3/4 | 1 1/2 | 7/16 | 4 3/4 | 2 13/16 | 9/16 | 5/8 | 2.55 | 4 5/8 | 5 5/8 |
| 3 1/4 | 4 1/2 | 12 | 3/4 | 2 | 1 3/4 | 9/16 | 5 1/2 | 3 9/16 | 11/16 | 3/4 | 3.25 | 5 7/8 | 7 1/8 |
| 4 | 5 | 12 | 3/4 | 2 | 1 3/4 | 9/16 | 5 3/4 | 3 13/16 | 11/16 | 7/8 | 3.82 | 6 3/8 | 7 5/8 |
| 5 | 6 1/2 | 12 | 3/4 | 2 | 1 3/4 | 13/16 | 6 1/4 | 4 5/16 | 15/16 | 7/8 | 4.95 | 8 3/16 | 9 3/4 |
| 6 | 7 1/2 | 16 | 1 | 2 1/4 | 2 1/4 | 15/16 | 7 3/8 | 4 11/16 | 1 1/16 | 1 | 5.73 | 9 7/16 | 11 1/4 |
| 7 | 8 1/2 | 20 | 1 1/4 | 2 3/4 | 2 3/4 | 1 | 8 1/2 | 5 1/8 | 1 3/16 | 1 | 6.58 | 10 5/8 | 12 5/8 |
| 8 | 9 1/2 | 24 | 1 1/2 | 3 | 3 | 1 1/8 | 9 1/2 | 5 7/8 | 1 5/16 | 1 | 7.5 | 11 13/16 | 14 |

### Rod End Dimensions

| BORE | MM | KK | CC | A | B -.001/ -.003 | C | D | RM | MAX PRESSURE PSI | VB | W | Y | ZB* |
|---|---|---|---|---|---|---|---|---|---|---|---|---|---|
| 1 1/2 | 5/8 | 7/16-20 | 1/2-20 | 3/4 | 1 1/8 | 3/8 | 1/2 | 1 15/16 | 1500 | 1/4 | 5/8 | 2 15/32 | 6 |
| | 1 | 3/4-16 | 7/8-14 | 1 1/8 | 1 1/2 | 1/2 | 7/8 | 2 3/8 | 1000 | 1/2 | 1 | 2 15/32 | 6 3/8 |
| 2 | 1 | 3/4-16 | 7/8-14 | 1 1/8 | 1 1/2 | 1/2 | 7/8 | 2 3/8 | 2000 | 1/4 | 3/4 | 2 15/32 | 6 7/16 |
| | 1 3/8 | 1-14 | 1 1/4-12 | 1 5/8 | 2 | 5/8 | 1 1/8 | 2 7/8 | 1200 | 3/8 | 1 | 2 23/32 | 6 11/16 |
| 2 1/2 | 1 | 3/4-16 | 7/8-14 | 1 1/8 | 1 1/2 | 1/2 | 7/8 | 2 3/8 | 2000 | 1/4 | 3/4 | 2 15/32 | 6 9/16 |
| | 1 3/8 | 1-14 | 1 1/4-12 | 1 5/8 | 2 | 5/8 | 1 1/8 | 2 7/8 | 1500 | 3/8 | 1 | 2 23/32 | 6 13/16 |
| | 1 3/4 | 1 1/4-12 | 1 1/2-12 | 2 | 2 3/8 | 3/4 | 1 1/2 | 3 15/32 | 1100 | 1/2 | 1 1/4 | 2 31/32 | 7 1/16 |
| 3 1/4 | 1 3/8 | 1-14 | 1 1/4-12 | 1 5/8 | 2 | 5/8 | 1 1/8 | 2 7/8 | 800 | 1/4 | 7/8 | 2 23/32 | 7 11/16 |
| | 1 3/4 | 1 1/4-12 | 1 1/2-12 | 2 | 2 3/8 | 3/4 | 1 1/2 | 3 15/32 | 800 | 3/8 | 1 1/8 | 2 31/32 | 7 15/16 |
| | 2 | 1 1/2-12 | 1 3/4-12 | 2 1/4 | 2 5/8 | 7/8 | 1 11/16 | 3 23/32 | 600 | 3/8 | 1 1/4 | 3 3/32 | 8 1/16 |
| 4 | 1 3/4 | 1 1/4-12 | 1 1/2-12 | 2 | 2 3/8 | 3/4 | 1 1/2 | 3 15/32 | 1000 | 1/4 | 1 | 2 31/32 | 8 3/16 |
| | 2 | 1 1/2-12 | 1 3/4-12 | 2 1/4 | 2 5/8 | 7/8 | 1 11/16 | 3 23/32 | 1000 | 1/4 | 1 1/8 | 3 3/32 | 8 5/16 |
| | 2 1/2 | 1 7/8-12 | 2 1/4-12 | 3 | 3 1/8 | 1 | 2 1/16 | 4 1/4 | 700 | 3/8 | 1 3/8 | 3 11/32 | 8 9/16 |
| 5 | 2 | 1 1/2-12 | 1 3/4-12 | 2 1/4 | 2 5/8 | 7/8 | 1 11/16 | 3 23/32 | 850 | 1/4 | 1 1/8 | 3 3/32 | 9 1/16 |
| | 2 1/2 | 1 7/8-12 | 2 1/4-12 | 3 | 3 1/8 | 1 | 2 1/16 | 4 1/4 | 850 | 3/8 | 1 3/8 | 3 11/32 | 9 5/16 |
| | 3 | 2 1/4-12 | 2 3/4-12 | 3 1/2 | 3 3/4 | 1 | 2 5/8 | 5 7/16 | 450 | 3/8 | 1 3/8 | 3 11/32 | 9 5/16 |
| | 3 1/2 | 2 1/2-12 | 3 1/4-12 | 3 1/2 | 4 1/4 | 1 | 3 | 5 15/16 | 800 | 3/8 | 1 3/8 | 3 11/32 | 9 5/16 |
| 6 | 2 1/2 | 1 7/8-12 | 2 1/4-12 | 3 | 3 1/8 | 1 | 2 1/16 | 4 1/4 | 650 | 1/4 | 1 1/4 | 3 19/32 | 10 9/16 |
| | 3 | 2 1/4-12 | 2 3/4-12 | 3 1/2 | 3 3/4 | 1 | 2 5/8 | 5 7/16 | 650 | 1/4 | 1 1/4 | 3 19/32 | 10 9/16 |
| | 3 1/2 | 2 1/2-12 | 3 1/4-12 | 3 1/2 | 4 1/4 | 1 | 3 | 5 15/16 | 400 | 1/4 | 1 1/4 | 3 19/32 | 10 9/16 |
| | 4 | 3-12 | 3 3/4-12 | 4 | 4 3/4 | 1 | 3 3/8 | 6 5/16 | 400 | 1/4 | 1 1/4 | 3 19/32 | 10 9/16 |
| 7 | 3 | 2 1/4-12 | 2 3/4-12 | 3 1/2 | 3 3/4 | 1 | 2 5/8 | 5 7/16 | 1400 | 1/4 | 1 1/4 | 3 15/16 | 11 3/4 |
| | 3 1/2 | 2 1/2-12 | 3 1/4-12 | 3 1/2 | 4 1/4 | 1 | 3 | 5 15/16 | 1200 | 1/4 | 1 1/4 | 3 15/16 | 11 3/4 |
| | 4 | 3-12 | 3 3/4-12 | 4 | 4 3/4 | 1 | 3 3/8 | 6 5/16 | 1100 | 1/4 | 1 1/4 | 3 15/16 | 11 3/4 |
| | 4 1/2 | 3 1/4-12 | 4 1/4-12 | 4 1/2 | 5 1/4 | 1 | 3 7/8 | 6 15/16 | 1000 | 1/4 | 1 1/4 | 3 15/16 | 11 3/4 |
| | 5 | 3 1/2-12 | 4 3/4-12 | 5 | 5 3/4 | 1 | 4 1/4 | 7 7/16 | 800 | 1/4 | 1 1/4 | 3 15/16 | 11 3/4 |
| 8 | 3 1/2 | 2 1/2-12 | 3 1/4-12 | 3 1/2 | 4 1/4 | 1 | 3 | 5 15/16 | 1100 | 1/4 | 1 1/4 | 4 1/16 | 12 7/8 |
| | 4 | 3-12 | 3 3/4-12 | 4 | 4 3/4 | 1 | 3 3/8 | 6 5/16 | 1000 | 1/4 | 1 1/4 | 4 1/16 | 12 7/8 |
| | 4 1/2 | 3 1/4-12 | 4 1/4-12 | 4 1/2 | 5 1/4 | 1 | 3 7/8 | 6 15/16 | 1000 | 1/4 | 1 1/4 | 4 1/16 | 12 7/8 |
| | 5 | 3 1/2-12 | 4 3/4-12 | 5 | 5 3/4 | 1 | 4 1/4 | 7 7/16 | 800 | 1/4 | 1 1/4 | 4 1/16 | 12 7/8 |
| | 5 1/2 | 4-12 | 5 1/4-12 | 5 1/2 | 6 1/4 | 1 | 4 5/8 | 7 15/16 | 800 | 1/4 | 1 1/4 | 4 1/16 | 12 7/8 |

## NFPA MF2 - Cap Rectangular Flange

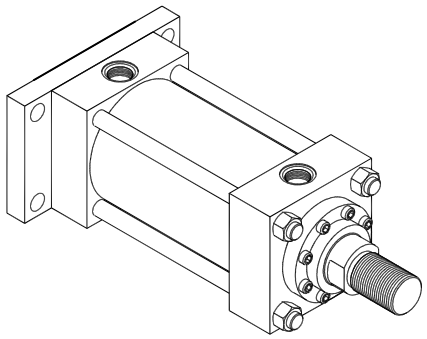

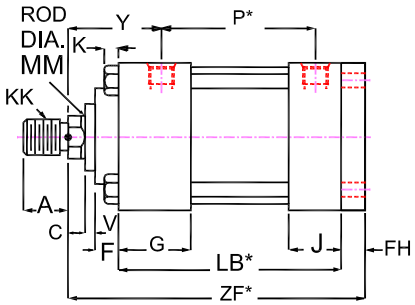


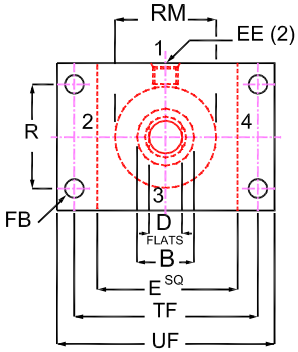


* Add stroke to starred dimension

### Body Dimensions

| BORE | E | EE (SAE) | EE (NPTF) | G | J | K | LB* | P* | FB | FH | R | TF | UF |
|---|---|---|---|---|---|---|---|---|---|---|---|---|---|
| 1 1/2 | 2 1/2 | 8 | 1/2 | 1 3/4 | 1 1/2 | 3/8 | 4 5/8 | 2 11/16 | 7/16 | 3/8 | 1.63 | 3 7/16 | 4 1/4 |
| 2 | 3 | 8 | 1/2 | 1 3/4 | 1 1/2 | 7/16 | 4 5/8 | 2 11/16 | 9/16 | 5/8 | 2.05 | 4 1/8 | 5 1/8 |
| 2 1/2 | 3 1/2 | 8 | 1/2 | 1 3/4 | 1 1/2 | 7/16 | 4 3/4 | 2 13/16 | 9/16 | 5/8 | 2.55 | 4 5/8 | 5 5/8 |
| 3 1/4 | 4 1/2 | 12 | 3/4 | 2 | 1 3/4 | 9/16 | 5 1/2 | 3 9/16 | 11/16 | 3/4 | 3.25 | 5 7/8 | 7 1/8 |
| 4 | 5 | 12 | 3/4 | 2 | 1 3/4 | 9/16 | 5 3/4 | 3 13/16 | 11/16 | 7/8 | 3.82 | 6 3/8 | 7 5/8 |
| 5 | 6 1/2 | 12 | 3/4 | 2 | 1 3/4 | 13/16 | 6 1/4 | 4 5/16 | 15/16 | 7/8 | 4.95 | 8 3/16 | 9 3/4 |
| 6 | 7 1/2 | 16 | 1 | 2 1/4 | 2 1/4 | 15/16 | 7 3/8 | 4 11/16 | 1 1/16 | 1 | 5.73 | 9 7/16 | 11 1/4 |
| 7 | 8 1/2 | 20 | 1 1/4 | 2 3/4 | 2 3/4 | 1 | 8 1/2 | 5 1/8 | 1 3/16 | 1 | 6.58 | 10 5/8 | 12 5/8 |
| 8 | 9 1/2 | 24 | 1 1/2 | 3 | 3 | 1 1/8 | 9 1/2 | 5 7/8 | 1 5/16 | 1 | 7.5 | 11 13/16 | 14 |

### Rod End Dimensions

| BORE | MM | KK | CC | A | B -.001/ -.003 | C | D | RM | MAX PRESSURE PSI | F | VB | W | Y | ZF* |
|---|---|---|---|---|---|---|---|---|---|---|---|---|---|---|
| 1 1/2 | 5/8 | 7/16-20 | 1/2-20 | 3/4 | 1 1/8 | 3/8 | 1/2 | 1 15/16 | 2500 | 3/8 | 1/4 | 5/8 | 2 15/32 | 6 |
| | 1 | 3/4-16 | 7/8-14 | 1 1/8 | 1 1/2 | 1/2 | 7/8 | 2 3/8 | 3000 | 3/8 | 1/2 | 1 | 2 15/32 | 6 3/8 |
| 2 | 1 | 3/4-16 | 7/8-14 | 1 1/8 | 1 1/2 | 1/2 | 7/8 | 2 3/8 | 3000 | 3/8 | 1/4 | 3/4 | 2 15/32 | 6 5/8 |
| | 1 3/8 | 1-14 | 1 1/4-12 | 1 5/8 | 2 | 5/8 | 1 1/8 | 2 7/8 | 3000 | 3/8 | 3/8 | 1 | 2 23/32 | 6 7/8 |
| 2 1/2 | 1 | 3/4-16 | 7/8-14 | 1 1/8 | 1 1/2 | 1/2 | 7/8 | 2 3/8 | 3000 | 3/8 | 1/4 | 3/4 | 2 15/32 | 6 3/4 |
| | 1 3/8 | 1-14 | 1 1/4-12 | 1 5/8 | 2 | 5/8 | 1 1/8 | 2 7/8 | 3000 | 3/8 | 3/8 | 1 | 2 23/32 | 7 |
| | 1 3/4 | 1 1/4-12 | 1 1/2-12 | 2 | 2 3/8 | 3/4 | 1 1/2 | 3 15/32 | 3000 | 5/8 | 1/2 | 1 1/4 | 2 31/32 | 7 1/4 |
| 3 1/4 | 1 3/8 | 1-14 | 1 1/4-12 | 1 5/8 | 2 | 5/8 | 1 1/8 | 2 7/8 | 3000 | 3/8 | 1/4 | 7/8 | 2 23/32 | 7 7/8 |
| | 1 3/4 | 1 1/4-12 | 1 1/2-12 | 2 | 2 3/8 | 3/4 | 1 1/2 | 3 15/32 | 3000 | 5/8 | 3/8 | 1 1/8 | 2 31/32 | 8 1/8 |
| | 2 | 1 1/2-12 | 1 3/4-12 | 2 1/4 | 2 5/8 | 7/8 | 1 11/16 | 3 23/32 | 3000 | 5/8 | 3/8 | 1 1/4 | 3 3/32 | 8 1/4 |
| 4 | 1 3/4 | 1 1/4-12 | 1 1/2-12 | 2 | 2 3/8 | 3/4 | 1 1/2 | 3 15/32 | 3000 | 5/8 | 1/4 | 1 | 2 31/32 | 8 1/2 |
| | 2 | 1 1/2-12 | 1 3/4-12 | 2 1/4 | 2 5/8 | 7/8 | 1 11/16 | 3 23/32 | 3000 | 5/8 | 1/4 | 1 1/8 | 3 3/32 | 8 5/8 |
| | 2 1/2 | 1 7/8-12 | 2 1/4-12 | 3 | 3 1/8 | 1 | 2 1/16 | 4 1/4 | 3000 | 5/8 | 3/8 | 1 3/8 | 3 11/32 | 8 7/8 |
| 5 | 2 | 1 1/2-12 | 1 3/4-12 | 2 1/4 | 2 5/8 | 7/8 | 1 11/16 | 3 23/32 | 2000 | 5/8 | 1/4 | 1 1/8 | 3 3/32 | 9 1/8 |
| | 2 1/2 | 1 7/8-12 | 2 1/4-12 | 3 | 3 1/8 | 1 | 2 1/16 | 4 1/4 | 2000 | 5/8 | 3/8 | 1 3/8 | 3 11/32 | 9 3/8 |
| | 3 | 2 1/4-12 | 2 3/4-12 | 3 1/2 | 3 3/4 | 1 | 2 5/8 | 5 7/16 | 2500 | 7/8 | 3/8 | 1 3/8 | 3 11/32 | 9 3/8 |
| | 3 1/2 | 2 1/2-12 | 3 1/4-12 | 3 1/2 | 4 1/4 | 1 | 3 | 5 15/16 | 3000 | 15/16 | 3/8 | 1 3/8 | 3 11/32 | 9 3/8 |
| 6 | 2 1/2 | 1 7/8-12 | 2 1/4-12 | 3 | 3 1/8 | 1 | 2 1/16 | 4 1/4 | 1800 | 5/8 | 1/4 | 1 1/4 | 3 19/32 | 10 5/8 |
| | 3 | 2 1/4-12 | 2 3/4-12 | 3 1/2 | 3 3/4 | 1 | 2 5/8 | 5 7/16 | 2000 | 7/8 | 1/4 | 1 1/4 | 3 19/32 | 10 5/8 |
| | 3 1/2 | 2 1/2-12 | 3 1/4-12 | 3 1/2 | 4 1/4 | 1 | 3 | 5 15/16 | 2000 | 15/16 | 1/4 | 1 1/4 | 3 19/32 | 10 5/8 |
| | 4 | 3-12 | 3 3/4-12 | 4 | 4 3/4 | 1 | 3 3/8 | 6 5/16 | 2500 | 15/16 | 1/4 | 1 1/4 | 3 19/32 | 10 5/8 |
| 7 | 3 | 2 1/4-12 | 2 3/4-12 | 3 1/2 | 3 3/4 | 1 | 2 5/8 | 5 7/16 | 1400 | 7/8 | 1/4 | 1 1/4 | 3 15/16 | 11 3/4 |
| | 3 1/2 | 2 1/2-12 | 3 1/4-12 | 3 1/2 | 4 1/4 | 1 | 3 | 5 15/16 | 1200 | 15/16 | 1/4 | 1 1/4 | 3 15/16 | 11 3/4 |
| | 4 | 3-12 | 3 3/4-12 | 4 | 4 3/4 | 1 | 3 3/8 | 6 5/16 | 1100 | 15/16 | 1/4 | 1 1/4 | 3 15/16 | 11 3/4 |
| | 4 1/2 | 3 1/4-12 | 4 1/4-12 | 4 1/2 | 5 1/4 | 1 | 3 7/8 | 6 15/16 | 1000 | 15/16 | 1/4 | 1 1/4 | 3 15/16 | 11 3/4 |
| | 5 | 3 1/2-12 | 4 3/4-12 | 5 | 5 3/4 | 1 | 4 1/4 | 7 7/16 | 800 | 15/16 | 1/4 | 1 1/4 | 3 15/16 | 11 3/4 |
| 8 | 3 1/2 | 2 1/2-12 | 3 1/4-12 | 3 1/2 | 4 1/4 | 1 | 3 | 5 15/16 | 1100 | 15/16 | 1/4 | 1 1/4 | 4 1/16 | 12 3/4 |
| | 4 | 3-12 | 3 3/4-12 | 4 | 4 3/4 | 1 | 3 3/8 | 6 5/16 | 1000 | 15/16 | 1/4 | 1 1/4 | 4 1/16 | 12 3/4 |
| | 4 1/2 | 3 1/4-12 | 4 1/4-12 | 4 1/2 | 5 1/4 | 1 | 3 7/8 | 6 15/16 | 1000 | 15/16 | 1/4 | 1 1/4 | 4 1/16 | 12 3/4 |
| | 5 | 3 1/2-12 | 4 3/4-12 | 5 | 5 3/4 | 1 | 4 1/4 | 7 7/16 | 800 | 15/16 | 1/4 | 1 1/4 | 4 1/16 | 12 3/4 |
| | 5 1/2 | 4-12 | 5 1/4-12 | 5 1/2 | 6 1/4 | 1 | 4 5/8 | 7 15/16 | 800 | 15/16 | 1/4 | 1 1/4 | 4 1/16 | 12 3/4 |

## NFPA MF5 - Head Square Flange

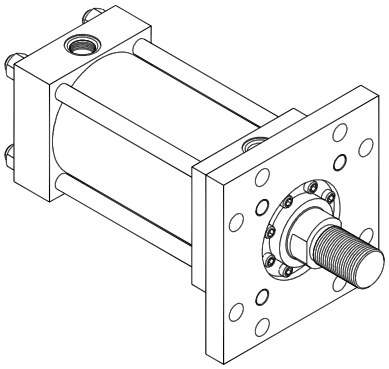

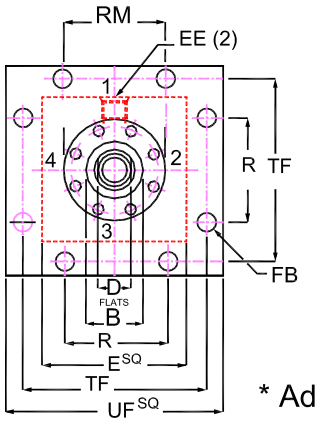


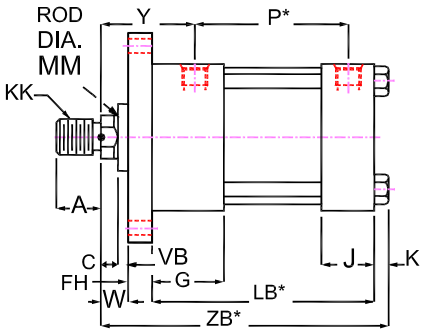


* Add stroke to starred dimension

## Body Dimensions

| BORE | E | EE (SAE) | EE (NPTF) | G | J | K | LB* | P* | FB | FH | R | TF | UF |
|---|---|---|---|---|---|---|---|---|---|---|---|---|---|
| 1 1/2 | 2 1/2 | 8 | 1/2 | 1 3/4 | 1 1/2 | 3/8 | 4 5/8 | 2 11/16 | 7/16 | 3/8 | 1.63 | 3 7/16 | 4 1/4 |
| 2 | 3 | 8 | 1/2 | 1 3/4 | 1 1/2 | 7/16 | 4 5/8 | 2 11/16 | 9/16 | 5/8 | 2.05 | 4 1/8 | 5 1/8 |
| 2 1/2 | 3 1/2 | 8 | 1/2 | 1 3/4 | 1 1/2 | 7/16 | 4 3/4 | 2 13/16 | 9/16 | 5/8 | 2.55 | 4 5/8 | 5 5/8 |
| 3 1/4 | 4 1/2 | 12 | 3/4 | 2 | 1 3/4 | 9/16 | 5 1/2 | 3 9/16 | 11/16 | 3/4 | 3.25 | 5 7/8 | 7 1/8 |
| 4 | 5 | 12 | 3/4 | 2 | 1 3/4 | 9/16 | 5 3/4 | 3 13/16 | 11/16 | 7/8 | 3.82 | 6 3/8 | 7 5/8 |
| 5 | 6 1/2 | 12 | 3/4 | 2 | 1 3/4 | 13/16 | 6 1/4 | 4 5/16 | 15/16 | 7/8 | 4.95 | 8 3/16 | 9 3/4 |
| 6 | 7 1/2 | 16 | 1 | 2 1/4 | 2 1/4 | 15/16 | 7 3/8 | 4 11/16 | 1 1/16 | 1 | 5.73 | 9 7/16 | 11 1/4 |
| 7 | 8 1/2 | 20 | 1 1/4 | 2 3/4 | 2 3/4 | 1 | 8 1/2 | 5 1/8 | 1 3/16 | 1 | 6.58 | 10 5/8 | 12 5/8 |
| 8 | 9 1/2 | 24 | 1 1/2 | 3 | 3 | 1 1/8 | 9 1/2 | 5 7/8 | 1 5/16 | 1 | 7.5 | 11 13/16 | 14 |

## Rod End Dimensions

| BORE | MM | KK | CC | A | B -.001/ -.003 | C | D | RM | MAX PRESSURE PSI | VB | W | Y | ZB* |
|---|---|---|---|---|---|---|---|---|---|---|---|---|---|
| 1 1/2 | 5/8 | 7/16-20 | 1/2-20 | 3/4 | 1 1/8 | 3/8 | 1/2 | 1 15/16 | 3000 | 1/4 | 5/8 | 2 15/32 | 6 |
| | 1 | 3/4-16 | 7/8-14 | 1 1/8 | 1 1/2 | 1/2 | 7/8 | 2 3/8 | 3000 | 1/2 | 1 | 2 15/32 | 6 3/8 |
| 2 | 1 | 3/4-16 | 7/8-14 | 1 1/8 | 1 1/2 | 1/2 | 7/8 | 2 3/8 | 3000 | 1/4 | 3/4 | 2 15/32 | 6 7/16 |
| | 1 3/8 | 1-14 | 1 1/4-12 | 1 5/8 | 2 | 5/8 | 1 1/8 | 2 7/8 | 3000 | 3/8 | 1 | 2 23/32 | 6 11/16 |
| 2 1/2 | 1 | 3/4-16 | 7/8-14 | 1 1/8 | 1 1/2 | 1/2 | 7/8 | 2 3/8 | 3000 | 1/4 | 3/4 | 2 15/32 | 6 9/16 |
| | 1 3/8 | 1-14 | 1 1/4-12 | 1 5/8 | 2 | 5/8 | 1 1/8 | 2 7/8 | 3000 | 3/8 | 1 | 2 23/32 | 6 13/16 |
| | 1 3/4 | 1 1/4-12 | 1 1/2-12 | 2 | 2 3/8 | 3/4 | 1 1/2 | 3 15/32 | 3000 | 1/2 | 1 1/4 | 2 31/32 | 7 1/16 |
| 3 1/4 | 1 3/8 | 1-14 | 1 1/4-12 | 1 5/8 | 2 | 5/8 | 1 1/8 | 2 7/8 | 3000 | 1/4 | 7/8 | 2 23/32 | 7 11/16 |
| | 1 3/4 | 1 1/4-12 | 1 1/2-12 | 2 | 2 3/8 | 3/4 | 1 1/2 | 3 15/32 | 3000 | 3/8 | 1 1/8 | 2 31/32 | 7 15/16 |
| | 2 | 1 1/2-12 | 1 3/4-12 | 2 1/4 | 2 5/8 | 7/8 | 1 11/16 | 3 23/32 | 3000 | 3/8 | 1 1/4 | 3 3/32 | 8 1/16 |
| 4 | 1 3/4 | 1 1/4-12 | 1 1/2-12 | 2 | 2 3/8 | 3/4 | 1 1/2 | 3 15/32 | 3000 | 1/4 | 1 | 2 31/32 | 8 3/16 |
| | 2 | 1 1/2-12 | 1 3/4-12 | 2 1/4 | 2 5/8 | 7/8 | 1 11/16 | 3 23/32 | 3000 | 1/4 | 1 1/8 | 3 3/32 | 8 5/16 |
| | 2 1/2 | 1 7/8-12 | 2 1/4-12 | 3 | 3 1/8 | 1 | 2 1/16 | 4 1/4 | 3000 | 3/8 | 1 3/8 | 3 11/32 | 8 9/16 |
| 5 | 2 | 1 1/2-12 | 1 3/4-12 | 2 1/4 | 2 5/8 | 7/8 | 1 11/16 | 3 23/32 | 3000 | 1/4 | 1 1/8 | 3 3/32 | 9 1/16 |
| | 2 1/2 | 1 7/8-12 | 2 1/4-12 | 3 | 3 1/8 | 1 | 2 1/16 | 4 1/4 | 3000 | 3/8 | 1 3/8 | 3 11/32 | 9 5/16 |
| | 3 | 2 1/4-12 | 2 3/4-12 | 3 1/2 | 3 3/4 | 1 | 2 5/8 | 5 7/16 | 3000 | 3/8 | 1 3/8 | 3 11/32 | 9 5/16 |
| | 3 1/2 | 2 1/2-12 | 3 1/4-12 | 3 1/2 | 4 1/4 | 1 | 3 | 5 15/16 | 3000 | 3/8 | 1 3/8 | 3 11/32 | 9 5/16 |
| 6 | 2 1/2 | 1 7/8-12 | 2 1/4-12 | 3 | 3 1/8 | 1 | 2 1/16 | 4 1/4 | 3000 | 1/4 | 1 1/4 | 3 19/32 | 10 9/16 |
| | 3 | 2 1/4-12 | 2 3/4-12 | 3 1/2 | 3 3/4 | 1 | 2 5/8 | 5 7/16 | 3000 | 1/4 | 1 1/4 | 3 19/32 | 10 9/16 |
| | 3 1/2 | 2 1/2-12 | 3 1/4-12 | 3 1/2 | 4 1/4 | 1 | 3 | 5 15/16 | 2700 | 1/4 | 1 1/4 | 3 19/32 | 10 9/16 |
| | 4 | 3-12 | 3 3/4-12 | 4 | 4 3/4 | 1 | 3 3/8 | 6 5/16 | 2700 | 1/4 | 1 1/4 | 3 19/32 | 10 9/16 |
| 7 | 3 | 2 1/4-12 | 2 3/4-12 | 3 1/2 | 3 3/4 | 1 | 2 5/8 | 5 7/16 | 3000 | 1/4 | 1 1/4 | 3 15/16 | 11 3/4 |
| | 3 1/2 | 2 1/2-12 | 3 1/4-12 | 3 1/2 | 4 1/4 | 1 | 3 | 5 15/16 | 3000 | 1/4 | 1 1/4 | 3 15/16 | 11 3/4 |
| | 4 | 3-12 | 3 3/4-12 | 4 | 4 3/4 | 1 | 3 3/8 | 6 5/16 | 3000 | 1/4 | 1 1/4 | 3 15/16 | 11 3/4 |
| | 4 1/2 | 3 1/4-12 | 4 1/4-12 | 4 1/2 | 5 1/4 | 1 | 3 7/8 | 6 15/16 | 3000 | 1/4 | 1 1/4 | 3 15/16 | 11 3/4 |
| | 5 | 3 1/2-12 | 4 3/4-12 | 5 | 5 3/4 | 1 | 4 1/4 | 7 7/16 | 2700 | 1/4 | 1 1/4 | 3 15/16 | 11 3/4 |
| 8 | 3 1/2 | 2 1/2-12 | 3 1/4-12 | 3 1/2 | 4 1/4 | 1 | 3 | 5 15/16 | 3000 | 1/4 | 1 1/4 | 4 1/16 | 12 7/8 |
| | 4 | 3-12 | 3 3/4-12 | 4 | 4 3/4 | 1 | 3 3/8 | 6 5/16 | 2500 | 1/4 | 1 1/4 | 4 1/16 | 12 7/8 |
| | 4 1/2 | 3 1/4-12 | 4 1/4-12 | 4 1/2 | 5 1/4 | 1 | 3 7/8 | 6 15/16 | 2500 | 1/4 | 1 1/4 | 4 1/16 | 12 7/8 |
| | 5 | 3 1/2-12 | 4 3/4-12 | 5 | 5 3/4 | 1 | 4 1/4 | 7 7/16 | 2500 | 1/4 | 1 1/4 | 4 1/16 | 12 7/8 |
| | 5 1/2 | 4-12 | 5 1/4-12 | 5 1/2 | 6 1/4 | 1 | 4 5/8 | 7 15/16 | 2300 | 1/4 | 1 1/4 | 4 1/16 | 12 7/8 |

## NFPA MF6 - Cap Square Flange

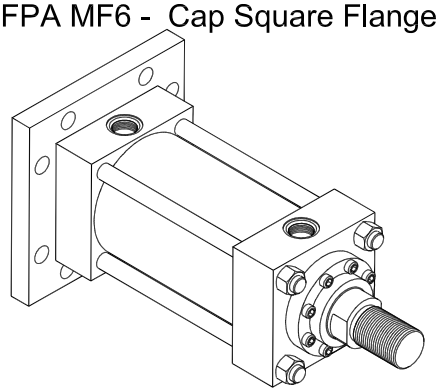

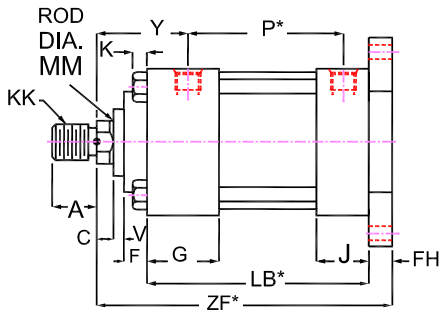


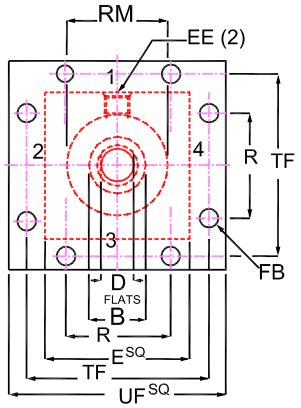


* Add stroke to starred dimension

## Body Dimensions

| BORE | E | EE (SAE) | EE (NPTF) | G | J | K | LB* | P* | FB | FH | R | TF | UF |
|---|---|---|---|---|---|---|---|---|---|---|---|---|---|
| 1 1/2 | 2 1/2 | 8 | 1/2 | 1 3/4 | 1 1/2 | 3/8 | 4 5/8 | 2 11/16 | 7/16 | 3/8 | 1.63 | 3 7/16 | 4 1/4 |
| 2 | 3 | 8 | 1/2 | 1 3/4 | 1 1/2 | 7/16 | 4 5/8 | 2 11/16 | 9/16 | 5/8 | 2.05 | 4 1/8 | 5 1/8 |
| 2 1/2 | 3 1/2 | 8 | 1/2 | 1 3/4 | 1 1/2 | 7/16 | 4 3/4 | 2 13/16 | 9/16 | 5/8 | 2.55 | 4 5/8 | 5 5/8 |
| 3 1/4 | 4 1/2 | 12 | 3/4 | 2 | 1 3/4 | 9/16 | 5 1/2 | 3 9/16 | 11/16 | 3/4 | 3.25 | 5 7/8 | 7 1/8 |
| 4 | 5 | 12 | 3/4 | 2 | 1 3/4 | 9/16 | 5 3/4 | 3 13/16 | 11/16 | 7/8 | 3.82 | 6 3/8 | 7 5/8 |
| 5 | 6 1/2 | 12 | 3/4 | 2 | 1 3/4 | 13/16 | 6 1/4 | 4 5/16 | 15/16 | 7/8 | 4.95 | 8 3/16 | 9 3/4 |
| 6 | 7 1/2 | 16 | 1 | 2 1/4 | 2 1/4 | 15/16 | 7 3/8 | 4 11/16 | 1 1/16 | 1 | 5.73 | 9 7/16 | 11 1/4 |
| 7 | 8 1/2 | 20 | 1 1/4 | 2 3/4 | 2 3/4 | 1 | 8 1/2 | 5 1/8 | 1 3/16 | 1 | 6.58 | 10 5/8 | 12 5/8 |
| 8 | 9 1/2 | 24 | 1 1/2 | 3 | 3 | 1 1/8 | 9 1/2 | 5 7/8 | 1 5/16 | 1 | 7.5 | 11 13/16 | 14 |

## Rod End Dimensions

| BORE | MM | KK | CC | A | B -.001/ -.003 | C | D | RM | F | VB | W | Y | ZF* |
|---|---|---|---|---|---|---|---|---|---|---|---|---|---|
| 1 1/2 | 5/8 | 7/16-20 | 1/2-20 | 3/4 | 1 1/8 | 3/8 | 1/2 | 1 15/16 | 3/8 | 1/4 | 5/8 | 2 15/32 | 6 |
| | 1 | 3/4-16 | 7/8-14 | 1 1/8 | 1 1/2 | 1/2 | 7/8 | 2 3/8 | 3/8 | 1/2 | 1 | 2 15/32 | 6 3/8 |
| 2 | 1 | 3/4-16 | 7/8-14 | 1 1/8 | 1 1/2 | 1/2 | 7/8 | 2 3/8 | 3/8 | 1/4 | 3/4 | 2 15/32 | 6 5/8 |
| | 1 3/8 | 1-14 | 1 1/4-12 | 1 5/8 | 2 | 5/8 | 1 1/8 | 2 7/8 | 3/8 | 3/8 | 1 | 2 23/32 | 6 7/8 |
| 2 1/2 | 1 | 3/4-16 | 7/8-14 | 1 1/8 | 1 1/2 | 1/2 | 7/8 | 2 3/8 | 3/8 | 1/4 | 3/4 | 2 15/32 | 6 3/4 |
| | 1 3/8 | 1-14 | 1 1/4-12 | 1 5/8 | 2 | 5/8 | 1 1/8 | 2 7/8 | 3/8 | 3/8 | 1 | 2 23/32 | 7 |
| | 1 3/4 | 1 1/4-12 | 1 1/2-12 | 2 | 2 3/8 | 3/4 | 1 1/2 | 3 15/32 | 5/8 | 1/2 | 1 1/4 | 2 31/32 | 7 1/4 |
| 3 1/4 | 1 3/8 | 1-14 | 1 1/4-12 | 1 5/8 | 2 | 5/8 | 1 1/8 | 2 7/8 | 3/8 | 1/4 | 7/8 | 2 23/32 | 7 7/8 |
| | 1 3/4 | 1 1/4-12 | 1 1/2-12 | 2 | 2 3/8 | 3/4 | 1 1/2 | 3 15/32 | 5/8 | 3/8 | 1 1/8 | 2 31/32 | 8 1/8 |
| | 2 | 1 1/2-12 | 1 3/4-12 | 2 1/4 | 2 5/8 | 7/8 | 1 11/16 | 3 23/32 | 5/8 | 3/8 | 1 1/4 | 3 3/32 | 8 1/4 |
| 4 | 1 3/4 | 1 1/4-12 | 1 1/2-12 | 2 | 2 3/8 | 3/4 | 1 1/2 | 3 15/32 | 5/8 | 1/4 | 1 | 2 31/32 | 8 1/2 |
| | 2 | 1 1/2-12 | 1 3/4-12 | 2 1/4 | 2 5/8 | 7/8 | 1 11/16 | 3 23/32 | 5/8 | 1/4 | 1 1/8 | 3 3/32 | 8 5/8 |
| | 2 1/2 | 1 7/8-12 | 2 1/4-12 | 3 | 3 1/8 | 1 | 2 1/16 | 4 1/4 | 5/8 | 3/8 | 1 3/8 | 3 11/32 | 8 7/8 |
| 5 | 2 | 1 1/2-12 | 1 3/4-12 | 2 1/4 | 2 5/8 | 7/8 | 1 11/16 | 3 23/32 | 5/8 | 1/4 | 1 1/8 | 3 3/32 | 9 1/8 |
| | 2 1/2 | 1 7/8-12 | 2 1/4-12 | 3 | 3 1/8 | 1 | 2 1/16 | 4 1/4 | 5/8 | 3/8 | 1 3/8 | 3 11/32 | 9 3/8 |
| | 3 | 2 1/4-12 | 2 3/4-12 | 3 1/2 | 3 3/4 | 1 | 2 5/8 | 5 7/16 | 7/8 | 3/8 | 1 3/8 | 3 11/32 | 9 3/8 |
| | 3 1/2 | 2 1/2-12 | 3 1/4-12 | 3 1/2 | 4 1/4 | 1 | 3 | 5 15/16 | 15/16 | 3/8 | 1 3/8 | 3 11/32 | 9 3/8 |
| 6 | 2 1/2 | 1 7/8-12 | 2 1/4-12 | 3 | 3 1/8 | 1 | 2 1/16 | 4 1/4 | 5/8 | 1/4 | 1 1/4 | 3 19/32 | 10 5/8 |
| | 3 | 2 1/4-12 | 2 3/4-12 | 3 1/2 | 3 3/4 | 1 | 2 5/8 | 5 7/16 | 7/8 | 1/4 | 1 1/4 | 3 19/32 | 10 5/8 |
| | 3 1/2 | 2 1/2-12 | 3 1/4-12 | 3 1/2 | 4 1/4 | 1 | 3 | 5 15/16 | 15/16 | 1/4 | 1 1/4 | 3 19/32 | 10 5/8 |
| | 4 | 3-12 | 3 3/4-12 | 4 | 4 3/4 | 1 | 3 3/8 | 6 5/16 | 15/16 | 1/4 | 1 1/4 | 3 19/32 | 10 5/8 |
| 7 | 3 | 2 1/4-12 | 2 3/4-12 | 3 1/2 | 3 3/4 | 1 | 2 5/8 | 5 7/16 | 7/8 | 1/4 | 1 1/4 | 3 15/16 | 11 3/4 |
| | 3 1/2 | 2 1/2-12 | 3 1/4-12 | 3 1/2 | 4 1/4 | 1 | 3 | 5 15/16 | 15/16 | 1/4 | 1 1/4 | 3 15/16 | 11 3/4 |
| | 4 | 3-12 | 3 3/4-12 | 4 | 4 3/4 | 1 | 3 3/8 | 6 5/16 | 15/16 | 1/4 | 1 1/4 | 3 15/16 | 11 3/4 |
| | 4 1/2 | 3 1/4-12 | 4 1/4-12 | 4 1/2 | 5 1/4 | 1 | 3 7/8 | 6 15/16 | 15/16 | 1/4 | 1 1/4 | 3 15/16 | 11 3/4 |
| | 5 | 3 1/2-12 | 4 3/4-12 | 5 | 5 3/4 | 1 | 4 1/4 | 7 7/16 | 15/16 | 1/4 | 1 1/4 | 3 15/16 | 11 3/4 |
| 8 | 3 1/2 | 2 1/2-12 | 3 1/4-12 | 3 1/2 | 4 1/4 | 1 | 3 | 5 15/16 | 15/16 | 1/4 | 1 1/4 | 4 1/16 | 12 3/4 |
| | 4 | 3-12 | 3 3/4-12 | 4 | 4 3/4 | 1 | 3 3/8 | 6 5/16 | 15/16 | 1/4 | 1 1/4 | 4 1/16 | 12 3/4 |
| | 4 1/2 | 3 1/4-12 | 4 1/4-12 | 4 1/2 | 5 1/4 | 1 | 3 7/8 | 6 15/16 | 15/16 | 1/4 | 1 1/4 | 4 1/16 | 12 3/4 |
| | 5 | 3 1/2-12 | 4 3/4-12 | 5 | 5 3/4 | 1 | 4 1/4 | 7 7/16 | 15/16 | 1/4 | 1 1/4 | 4 1/16 | 12 3/4 |
| | 5 1/2 | 4-12 | 5 1/4-12 | 5 1/2 | 6 1/4 | 1 | 4 5/8 | 7 15/16 | 15/16 | 1/4 | 1 1/4 | 4 1/16 | 12 3/4 |

## NFPA MS2 - Side Lugs

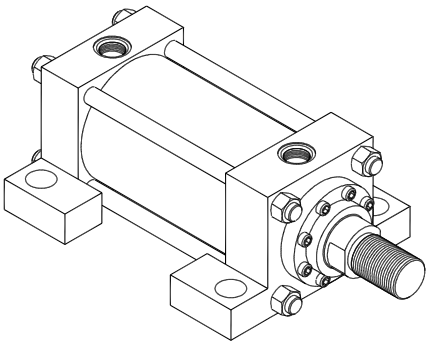

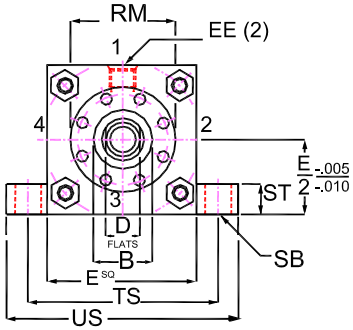


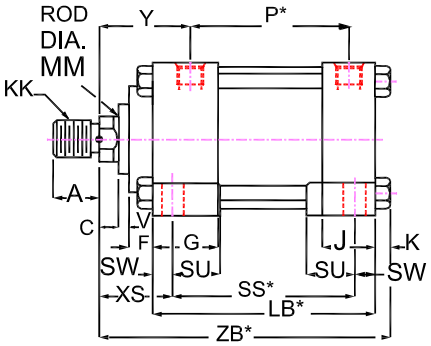


* Add stroke to starred dimension

## Body Dimensions

| BORE | E | EE (SAE) | EE (NPTF) | G | J | K | LB* | P* | SB | SS* | ST | SU | SW | TS | US |
|---|---|---|---|---|---|---|---|---|---|---|---|---|---|---|---|
| 1 1/2 | 2 1/2 | 8 | 1/2 | 1 3/4 | 1 1/2 | 3/8 | 4 5/8 | 2 11/16 | 7/16 | 3 7/8 | 1/2 | 15/16 | 3/8 | 3 1/4 | 4 |
| 2 | 3 | 8 | 1/2 | 1 3/4 | 1 1/2 | 7/16 | 4 5/8 | 2 11/16 | 9/16 | 3 5/8 | 3/4 | 1 1/4 | 1/2 | 4 | 5 |
| 2 1/2 | 3 1/2 | 8 | 1/2 | 1 3/4 | 1 1/2 | 7/16 | 4 3/4 | 2 13/16 | 13/16 | 3 3/8 | 1 | 1 9/16 | 11/16 | 4 7/8 | 6 1/4 |
| 3 1/4 | 4 1/2 | 12 | 3/4 | 2 | 1 3/4 | 9/16 | 5 1/2 | 3 9/16 | 13/16 | 4 1/8 | 1 | 1 9/16 | 11/16 | 5 7/8 | 7 1/4 |
| 4 | 5 | 12 | 3/4 | 2 | 1 3/4 | 9/16 | 5 3/4 | 3 13/16 | 1 1/16 | 4 | 1 1/4 | 2 | 7/8 | 6 3/4 | 8 1/2 |
| 5 | 6 1/2 | 12 | 3/4 | 2 | 1 3/4 | 13/16 | 6 1/4 | 4 5/16 | 1 1/16 | 4 1/2 | 1 1/4 | 2 | 7/8 | 8 1/4 | 10 |
| 6 | 7 1/2 | 16 | 1 | 2 1/4 | 2 1/4 | 15/16 | 7 3/8 | 4 11/16 | 1 5/16 | 5 1/8 | 1 1/2 | 2 1/2 | 1 1/8 | 9 3/4 | 12 |
| 7 | 8 1/2 | 20 | 1 1/4 | 2 3/4 | 2 3/4 | 1 | 8 1/2 | 5 1/8 | 1 9/16 | 5 3/4 | 1 3/4 | 2 7/8 | 1 3/8 | 11 1/4 | 14 |
| 8 | 9 1/2 | 24 | 1 1/2 | 3 | 3 | 1 1/8 | 9 1/2 | 5 7/8 | 1 9/16 | 6 3/4 | 1 3/4 | 2 7/8 | 1 3/8 | 12 1/4 | 15 |

## Rod End Dimensions

| BORE | M M | KK | CC | A | B -.001/ -.003 | C | D | F | RM | V | XS | Y | ZB* |
|---|---|---|---|---|---|---|---|---|---|---|---|---|---|
| 1 1/2 | 5/8 | 7/16-20 | 1/2-20 | 3/4 | 1 1/8 | 3/8 | 1/2 | 3/8 | 1 15/16 | 1/4 | 1 3/8 | 2 15/32 | 6 |
| | 1 | 3/4-16 | 7/8-14 | 1 1/8 | 1 1/2 | 1/2 | 7/8 | 3/8 | 2 3/8 | 1/2 | 1 3/4 | 2 15/32 | 6 3/8 |
| 2 | 1 | 3/4-16 | 7/8-14 | 1 1/8 | 1 1/2 | 1/2 | 7/8 | 3/8 | 2 3/8 | 1/4 | 1 7/8 | 2 15/32 | 6 7/16 |
| | 1 3/8 | 1-14 | 1 1/4-12 | 1 5/8 | 2 | 5/8 | 1 1/8 | 3/8 | 2 7/8 | 3/8 | 2 1/8 | 2 23/32 | 6 11/16 |
| 2 1/2 | 1 | 3/4-16 | 7/8-14 | 1 1/8 | 1 1/2 | 1/2 | 7/8 | 3/8 | 2 3/8 | 3/8 | 2 1/16 | 2 15/32 | 6 9/16 |
| | 1 3/8 | 1-14 | 1 1/4-12 | 1 5/8 | 2 | 5/8 | 1 1/8 | 3/8 | 2 7/8 | 3/8 | 2 5/16 | 2 23/32 | 6 13/16 |
| | 1 3/4 | 1 1/4-12 | 1 1/2-12 | 2 | 2 3/8 | 3/4 | 1 1/2 | 5/8 | 3 15/32 | 1/2 | 2 9/16 | 2 31/32 | 7 1/16 |
| 3 1/4 | 1 3/8 | 1-14 | 1 1/4-12 | 1 5/8 | 2 | 5/8 | 1 1/8 | 3/8 | 2 7/8 | 13/32 | 2 5/16 | 2 23/32 | 7 11/16 |
| | 1 3/4 | 1 1/4-12 | 1 1/2-12 | 2 | 2 3/8 | 3/4 | 1 1/2 | 5/8 | 3 15/32 | 3/8 | 2 9/16 | 2 31/32 | 7 15/16 |
| | 2 | 1 1/2-12 | 1 3/4-12 | 2 1/4 | 2 5/8 | 7/8 | 1 11/16 | 5/8 | 3 23/32 | 3/8 | 2 11/16 | 3 3/32 | 8 1/16 |
| 4 | 1 3/4 | 1 1/4-12 | 1 1/2-12 | 2 | 2 3/8 | 3/4 | 1 1/2 | 5/8 | 3 15/32 | 17/32 | 2 3/4 | 2 31/32 | 8 3/16 |
| | 2 | 1 1/2-12 | 1 3/4-12 | 2 1/4 | 2 5/8 | 7/8 | 1 11/16 | 5/8 | 3 23/32 | 17/32 | 2 7/8 | 3 3/32 | 8 5/16 |
| | 2 1/2 | 1 7/8-12 | 2 1/4-12 | 3 | 3 1/8 | 1 | 2 1/16 | 5/8 | 4 1/4 | 21/32 | 2 1/8 | 3 11/32 | 8 9/16 |
| 5 | 2 | 1 1/2-12 | 1 3/4-12 | 2 1/4 | 2 5/8 | 7/8 | 1 11/16 | 5/8 | 3 23/32 | 17/32 | 2 7/8 | 3 3/32 | 9 1/16 |
| | 2 1/2 | 1 7/8-12 | 2 1/4-12 | 3 | 3 1/8 | 1 | 2 1/16 | 5/8 | 4 1/4 | 21/32 | 3 1/8 | 3 11/32 | 9 5/16 |
| | 3 | 2 1/4-12 | 2 3/4-12 | 3 1/2 | 3 3/4 | 1 | 2 5/8 | 7/8 | 5 7/16 | 17/32 | 3 1/8 | 3 11/32 | 9 5/16 |
| | 3 1/2 | 2 1/2-12 | 3 1/4-12 | 3 1/2 | 4 1/4 | 1 | 3 | 15/16 | 5 15/16 | 17/32 | 3 1/8 | 3 11/32 | 9 5/16 |
| 6 | 2 1/2 | 1 7/8-12 | 2 1/4-12 | 3 | 3 1/8 | 1 | 2 1/16 | 5/8 | 4 1/4 | 21/32 | 3 3/8 | 3 19/32 | 10 9/16 |
| | 3 | 2 1/4-12 | 2 3/4-12 | 3 1/2 | 3 3/4 | 1 | 2 5/8 | 7/8 | 5 7/16 | 17/32 | 3 3/8 | 3 19/32 | 10 9/16 |
| | 3 1/2 | 2 1/2-12 | 3 1/4-12 | 3 1/2 | 4 1/4 | 1 | 3 | 15/16 | 5 15/16 | 17/32 | 3 3/8 | 3 19/32 | 10 9/16 |
| | 4 | 3-12 | 3 3/4-12 | 4 | 4 3/4 | 1 | 3 3/8 | 15/16 | 6 5/16 | 3/8 | 3 3/8 | 3 19/32 | 10 9/16 |
| 7 | 3 | 2 1/4-12 | 2 3/4-12 | 3 1/2 | 3 3/4 | 1 | 2 5/8 | 7/8 | 5 7/16 | 17/32 | 3 5/8 | 3 15/16 | 11 3/4 |
| | 3 1/2 | 2 1/2-12 | 3 1/4-12 | 3 1/2 | 4 1/4 | 1 | 3 | 15/16 | 5 15/16 | 17/32 | 3 5/8 | 3 15/16 | 11 3/4 |
| | 4 | 3-12 | 3 3/4-12 | 4 | 4 3/4 | 1 | 3 3/8 | 15/16 | 6 5/16 | 3/8 | 3 5/8 | 3 15/16 | 11 3/4 |
| | 4 1/2 | 3 1/4-12 | 4 1/4-12 | 4 1/2 | 5 1/4 | 1 | 3 7/8 | 15/16 | 6 15/16 | 3/8 | 3 5/8 | 3 15/16 | 11 3/4 |
| | 5 | 3 1/2-12 | 4 3/4-12 | 5 | 5 3/4 | 1 | 4 1/4 | 15/16 | 7 7/16 | 3/8 | 3 5/8 | 3 15/16 | 11 3/4 |
| 8 | 3 1/2 | 2 1/2-12 | 3 1/4-12 | 3 1/2 | 4 1/4 | 1 | 3 | 15/16 | 5 15/16 | 17/32 | 3 5/8 | 4 1/16 | 12 7/8 |
| | 4 | 3-12 | 3 3/4-12 | 4 | 4 3/4 | 1 | 3 3/8 | 15/16 | 6 5/16 | 3/8 | 3 5/8 | 4 1/16 | 12 7/8 |
| | 4 1/2 | 3 1/4-12 | 4 1/4-12 | 4 1/2 | 5 1/4 | 1 | 3 7/8 | 15/16 | 6 15/16 | 3/8 | 3 5/8 | 4 1/16 | 12 7/8 |
| | 5 | 3 1/2-12 | 4 3/4-12 | 5 | 5 3/4 | 1 | 4 1/4 | 15/16 | 7 7/16 | 3/8 | 3 5/8 | 4 1/16 | 12 7/8 |
| | 5 1/2 | 4-12 | 5 1/4-12 | 5 1/2 | 6 1/4 | 1 | 4 5/8 | 15/16 | 7 15/16 | 3/8 | 3 5/8 | 4 1/16 | 12 7/8 |

## NFPA MS3 - Center-Line Lugs

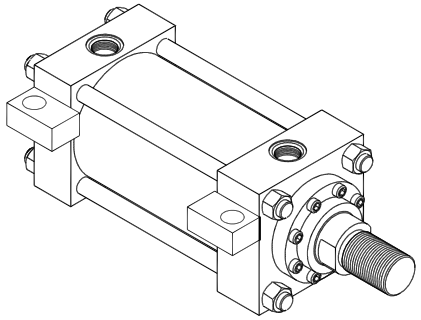

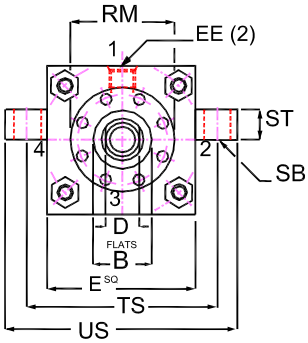


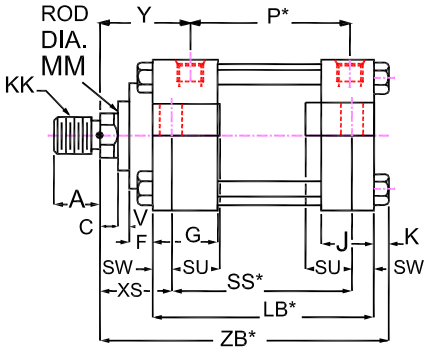


* Add stroke to starred dimension

## Body Dimensions

| BORE | E | EE (SAE) | EE (NPTF) | G | J | K | LB* | P* | SB | SS* | ST | SU | SW | TS | US |
|---|---|---|---|---|---|---|---|---|---|---|---|---|---|---|---|
| 1 1/2 | 2 1/2 | 8 | 1/2 | 1 3/4 | 1 1/2 | 3/8 | 4 5/8 | 2 11/16 | 7/16 | 3 7/8 | 1/2 | 15/16 | 3/8 | 3 1/4 | 4 |
| 2 | 3 | 8 | 1/2 | 1 3/4 | 1 1/2 | 7/16 | 4 5/8 | 2 11/16 | 9/16 | 3 5/8 | 3/4 | 1 1/4 | 1/2 | 4 | 5 |
| 2 1/2 | 3 1/2 | 8 | 1/2 | 1 3/4 | 1 1/2 | 7/16 | 4 3/4 | 2 13/16 | 13/16 | 3 3/8 | 1 | 1 9/16 | 11/16 | 4 7/8 | 6 1/4 |
| 3 1/4 | 4 1/2 | 12 | 3/4 | 2 | 1 3/4 | 9/16 | 5 1/2 | 3 9/16 | 13/16 | 4 1/8 | 1 | 1 9/16 | 11/16 | 5 7/8 | 7 1/4 |
| 4 | 5 | 12 | 3/4 | 2 | 1 3/4 | 9/16 | 5 3/4 | 3 13/16 | 1 1/16 | 4 | 1 1/4 | 2 | 7/8 | 6 3/4 | 8 1/2 |
| 5 | 6 1/2 | 12 | 3/4 | 2 | 1 3/4 | 13/16 | 6 1/4 | 4 5/16 | 1 1/16 | 4 1/2 | 1 1/4 | 2 | 7/8 | 8 1/4 | 10 |
| 6 | 7 1/2 | 16 | 1 | 2 1/4 | 2 1/4 | 15/16 | 7 3/8 | 4 11/16 | 1 5/16 | 5 1/8 | 1 1/2 | 2 1/2 | 1 1/8 | 9 3/4 | 12 |
| 7 | 8 1/2 | 20 | 1 1/4 | 2 3/4 | 2 3/4 | 1 | 8 1/2 | 5 1/8 | 1 9/16 | 5 3/4 | 1 3/4 | 2 7/8 | 1 3/8 | 11 1/4 | 14 |
| 8 | 9 1/2 | 24 | 1 1/2 | 3 | 3 | 1 1/8 | 9 1/2 | 5 7/8 | 1 9/16 | 6 3/4 | 1 3/4 | 2 7/8 | 1 3/8 | 12 1/4 | 15 |

## Rod End Dimensions

| BORE | M M | KK | CC | A | B -.001/ -.003 | C | D | F | RM | V | XT | Y | ZB* |
|---|---|---|---|---|---|---|---|---|---|---|---|---|---|
| 1 1/2 | 5/8 | 7/16-20 | 1/2-20 | 3/4 | 1 1/8 | 3/8 | 1/2 | 3/8 | 1 15/16 | 1/4 | 2 | 2 15/32 | 6 |
| | 1 | 3/4-16 | 7/8-14 | 1 1/8 | 1 1/2 | 1/2 | 7/8 | 3/8 | 2 3/8 | 1/2 | 2 3/8 | 2 15/32 | 6 3/8 |
| 2 | 1 | 3/4-16 | 7/8-14 | 1 1/8 | 1 1/2 | 1/2 | 7/8 | 3/8 | 2 3/8 | 1/4 | 2 3/8 | 2 15/32 | 6 7/16 |
| | 1 3/8 | 1-14 | 1 1/4-12 | 1 5/8 | 2 | 5/8 | 1 1/8 | 3/8 | 2 7/8 | 3/8 | 2 5/8 | 2 23/32 | 6 11/16 |
| 2 1/2 | 1 | 3/4-16 | 7/8-14 | 1 1/8 | 1 1/2 | 1/2 | 7/8 | 3/8 | 2 3/8 | 3/8 | 2 3/8 | 2 15/32 | 6 9/16 |
| | 1 3/8 | 1-14 | 1 1/4-12 | 1 5/8 | 2 | 5/8 | 1 1/8 | 3/8 | 2 7/8 | 3/8 | 2 5/8 | 2 23/32 | 6 13/16 |
| | 1 3/4 | 1 1/4-12 | 1 1/2-12 | 2 | 2 3/8 | 3/4 | 1 1/2 | 5/8 | 3 15/32 | 1/2 | 2 7/8 | 2 31/32 | 7 1/16 |
| 3 1/4 | 1 3/8 | 1-14 | 1 1/4-12 | 1 5/8 | 2 | 5/8 | 1 1/8 | 3/8 | 2 7/8 | 13/32 | 2 3/4 | 2 23/32 | 7 11/16 |
| | 1 3/4 | 1 1/4-12 | 1 1/2-12 | 2 | 2 3/8 | 3/4 | 1 1/2 | 5/8 | 3 15/32 | 3/8 | 3 | 2 31/32 | 7 15/16 |
| | 2 | 1 1/2-12 | 1 3/4-12 | 2 1/4 | 2 5/8 | 7/8 | 1 11/16 | 5/8 | 3 23/32 | 3/8 | 3 1/8 | 3 3/32 | 8 1/16 |
| 4 | 1 3/4 | 1 1/4-12 | 1 1/2-12 | 2 | 2 3/8 | 3/4 | 1 1/2 | 5/8 | 3 15/32 | 17/32 | 3 | 2 31/32 | 8 3/16 |
| | 2 | 1 1/2-12 | 1 3/4-12 | 2 1/4 | 2 5/8 | 7/8 | 1 11/16 | 5/8 | 3 23/32 | 17/32 | 3 1/8 | 3 3/32 | 8 5/16 |
| | 2 1/2 | 1 7/8-12 | 2 1/4-12 | 3 | 3 1/8 | 1 | 2 1/16 | 5/8 | 4 1/4 | 21/32 | 3 3/8 | 3 11/32 | 8 9/16 |
| 5 | 2 | 1 1/2-12 | 1 3/4-12 | 2 1/4 | 2 5/8 | 7/8 | 1 11/16 | 5/8 | 3 23/32 | 17/32 | 3 1/8 | 3 3/32 | 9 1/16 |
| | 2 1/2 | 1 7/8-12 | 2 1/4-12 | 3 | 3 1/8 | 1 | 2 1/16 | 5/8 | 4 1/4 | 21/32 | 3 3/8 | 3 11/32 | 9 5/16 |
| | 3 | 2 1/4-12 | 2 3/4-12 | 3 1/2 | 3 3/4 | 1 | 2 5/8 | 7/8 | 5 7/16 | 17/32 | 3 3/8 | 3 11/32 | 9 5/16 |
| | 3 1/2 | 2 1/2-12 | 3 1/4-12 | 3 1/2 | 4 1/4 | 1 | 3 | 15/16 | 5 15/16 | 17/32 | 3 3/8 | 3 11/32 | 9 5/16 |
| 6 | 2 1/2 | 1 7/8-12 | 2 1/4-12 | 3 | 3 1/8 | 1 | 2 1/16 | 5/8 | 4 1/4 | 21/32 | 3 1/2 | 3 19/32 | 10 9/16 |
| | 3 | 2 1/4-12 | 2 3/4-12 | 3 1/2 | 3 3/4 | 1 | 2 5/8 | 7/8 | 5 7/16 | 17/32 | 3 1/2 | 3 19/32 | 10 9/16 |
| | 3 1/2 | 2 1/2-12 | 3 1/4-12 | 3 1/2 | 4 1/4 | 1 | 3 | 15/16 | 5 15/16 | 17/32 | 3 1/2 | 3 19/32 | 10 9/16 |
| | 4 | 3-12 | 3 3/4-12 | 4 | 4 3/4 | 1 | 3 3/8 | 15/16 | 6 5/16 | 3/8 | 3 1/2 | 3 19/32 | 10 9/16 |
| 7 | 3 | 2 1/4-12 | 2 3/4-12 | 3 1/2 | 3 3/4 | 1 | 2 5/8 | 7/8 | 5 7/16 | 17/32 | 3 13/16 | 3 15/16 | 11 3/4 |
| | 3 1/2 | 2 1/2-12 | 3 1/4-12 | 3 1/2 | 4 1/4 | 1 | 3 | 15/16 | 5 15/16 | 17/32 | 3 13/16 | 3 15/16 | 11 3/4 |
| | 4 | 3-12 | 3 3/4-12 | 4 | 4 3/4 | 1 | 3 3/8 | 15/16 | 6 5/16 | 3/8 | 3 13/16 | 3 15/16 | 11 3/4 |
| | 4 1/2 | 3 1/4-12 | 4 1/4-12 | 4 1/2 | 5 1/4 | 1 | 3 7/8 | 15/16 | 6 15/16 | 3/8 | 3 13/16 | 3 15/16 | 11 3/4 |
| | 5 | 3 1/2-12 | 4 3/4-12 | 5 | 5 3/4 | 1 | 4 1/4 | 15/16 | 7 7/16 | 3/8 | 3 13/16 | 3 15/16 | 11 3/4 |
| 8 | 3 1/2 | 2 1/2-12 | 3 1/4-12 | 3 1/2 | 4 1/4 | 1 | 3 | 15/16 | 5 15/16 | 17/32 | 3 15/16 | 4 1/16 | 12 7/8 |
| | 4 | 3-12 | 3 3/4-12 | 4 | 4 3/4 | 1 | 3 3/8 | 15/16 | 6 5/16 | 3/8 | 3 15/16 | 4 1/16 | 12 7/8 |
| | 4 1/2 | 3 1/4-12 | 4 1/4-12 | 4 1/2 | 5 1/4 | 1 | 3 7/8 | 15/16 | 6 15/16 | 3/8 | 3 15/16 | 4 1/16 | 12 7/8 |
| | 5 | 3 1/2-12 | 4 3/4-12 | 5 | 5 3/4 | 1 | 4 1/4 | 15/16 | 7 7/16 | 3/8 | 3 15/16 | 4 1/16 | 12 7/8 |
| | 5 1/2 | 4-12 | 5 1/4-12 | 5 1/2 | 6 1/4 | 1 | 4 5/8 | 15/16 | 7 15/16 | 3/8 | 3 15/16 | 4 1/16 | 12 7/8 |

## NFPA MS4 - Side Tapped

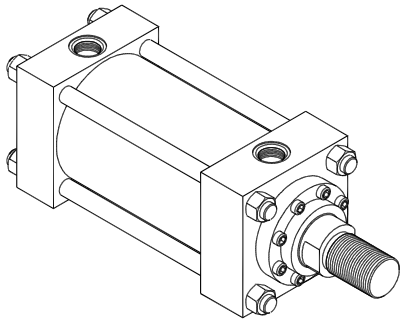

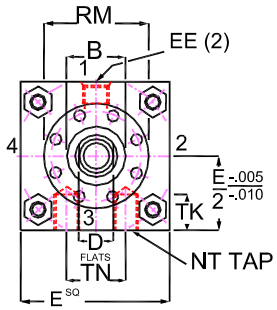


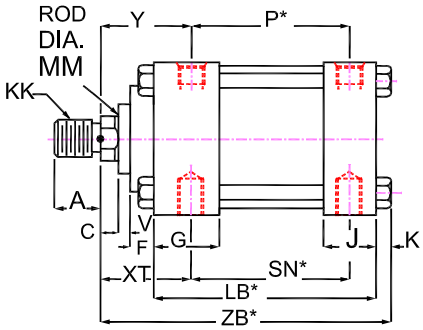


* Add stroke to starred dimension

## Body Dimensions

| BORE | E | EE (SAE) | EE (NPTF) | G | J | K | LB* | NT | P* | SN* | TK | TN |
|---|---|---|---|---|---|---|---|---|---|---|---|---|
| 1 1/2 | 2 1/2 | 8 | 1/2 | 1 3/4 | 1 1/2 | 3/8 | 4 5/8 | 3/8-16 | 2 11/16 | 2 7/8 | 9/16 | 3/4 |
| 2 | 3 | 8 | 1/2 | 1 3/4 | 1 1/2 | 7/16 | 4 5/8 | 1/2-13 | 2 11/16 | 2 7/8 | 1/2 | 15/16 |
| 2 1/2 | 3 1/2 | 8 | 1/2 | 1 3/4 | 1 1/2 | 7/16 | 4 3/4 | 5/8-11 | 2 13/16 | 3 | 13/16 | 1 5/16 |
| 3 1/4 | 4 1/2 | 12 | 3/4 | 2 | 1 3/4 | 9/16 | 5 1/2 | 3/4-10 | 3 9/16 | 3 1/2 | 3/4 | 1 1/2 |
| 4 | 5 | 12 | 3/4 | 2 | 1 3/4 | 9/16 | 5 3/4 | 1-8 | 3 13/16 | 3 3/4 | 1 | 2 1/16 |
| 5 | 6 1/2 | 12 | 3/4 | 2 | 1 3/4 | 13/16 | 6 1/4 | 1-8 | 4 5/16 | 4 1/4 | 1 1/8 | 2 15/16 |
| 6 | 7 1/2 | 16 | 1 | 2 1/4 | 2 1/4 | 15/16 | 7 3/8 | 1 1/4-7 | 4 11/16 | 5 1/8 | 1 5/16 | 3 5/16 |
| 7 | 8 1/2 | 20 | 1 1/4 | 2 3/4 | 2 3/4 | 1 | 8 1/2 | 1 1/2-6 | 5 1/8 | 5 7/8 | 2 1/8 | 3 3/4 |
| 8 | 9 1/2 | 24 | 1 1/2 | 3 | 3 | 1 1/8 | 9 1/2 | 1 1/2-6 | 5 7/8 | 6 5/8 | 1 9/16 | 4 1/4 |

## Rod End Dimensions

| BORE | M M | KK | CC | A | B -.001/ -.003 | C | D | F | RM | V | XT | Y | ZB* |
|---|---|---|---|---|---|---|---|---|---|---|---|---|---|
| 1 1/2 | 5/8 | 7/16-20 | 1/2-20 | 3/4 | 1 1/8 | 3/8 | 1/2 | 3/8 | 1 15/16 | 1/4 | 2 | 2 15/32 | 6 |
| | 1 | 3/4-16 | 7/8-14 | 1 1/8 | 1 1/2 | 1/2 | 7/8 | 3/8 | 2 3/8 | 1/2 | 2 3/8 | 2 15/32 | 6 3/8 |
| 2 | 1 | 3/4-16 | 7/8-14 | 1 1/8 | 1 1/2 | 1/2 | 7/8 | 3/8 | 2 3/8 | 1/4 | 2 3/8 | 2 15/32 | 6 7/16 |
| | 1 3/8 | 1-14 | 1 1/4-12 | 1 5/8 | 2 | 5/8 | 1 1/8 | 3/8 | 2 7/8 | 3/8 | 2 5/8 | 2 23/32 | 6 11/16 |
| 2 1/2 | 1 | 3/4-16 | 7/8-14 | 1 1/8 | 1 1/2 | 1/2 | 7/8 | 3/8 | 2 3/8 | 3/8 | 2 3/8 | 2 15/32 | 6 9/16 |
| | 1 3/8 | 1-14 | 1 1/4-12 | 1 5/8 | 2 | 5/8 | 1 1/8 | 3/8 | 2 7/8 | 3/8 | 2 5/8 | 2 23/32 | 6 13/16 |
| | 1 3/4 | 1 1/4-12 | 1 1/2-12 | 2 | 2 3/8 | 3/4 | 1 1/2 | 5/8 | 3 15/32 | 1/2 | 2 7/8 | 2 31/32 | 7 1/16 |
| 3 1/4 | 1 3/8 | 1-14 | 1 1/4-12 | 1 5/8 | 2 | 5/8 | 1 1/8 | 3/8 | 2 7/8 | 13/32 | 2 3/4 | 2 23/32 | 7 11/16 |
| | 1 3/4 | 1 1/4-12 | 1 1/2-12 | 2 | 2 3/8 | 3/4 | 1 1/2 | 5/8 | 3 15/32 | 3/8 | 3 | 2 31/32 | 7 15/16 |
| | 2 | 1 1/2-12 | 1 3/4-12 | 2 1/4 | 2 5/8 | 7/8 | 1 11/16 | 5/8 | 3 23/32 | 3/8 | 3 1/8 | 3 3/32 | 8 1/16 |
| 4 | 1 3/4 | 1 1/4-12 | 1 1/2-12 | 2 | 2 3/8 | 3/4 | 1 1/2 | 5/8 | 3 15/32 | 17/32 | 3 | 2 31/32 | 8 3/16 |
| | 2 | 1 1/2-12 | 1 3/4-12 | 2 1/4 | 2 5/8 | 7/8 | 1 11/16 | 5/8 | 3 23/32 | 17/32 | 3 1/8 | 3 3/32 | 8 5/16 |
| | 2 1/2 | 1 7/8-12 | 2 1/4-12 | 3 | 3 1/8 | 1 | 2 1/16 | 5/8 | 4 1/4 | 21/32 | 3 3/8 | 3 11/32 | 8 9/16 |
| 5 | 2 | 1 1/2-12 | 1 3/4-12 | 2 1/4 | 2 5/8 | 7/8 | 1 11/16 | 5/8 | 3 23/32 | 17/32 | 3 1/8 | 3 3/32 | 9 1/16 |
| | 2 1/2 | 1 7/8-12 | 2 1/4-12 | 3 | 3 1/8 | 1 | 2 1/16 | 5/8 | 4 1/4 | 21/32 | 3 3/8 | 3 11/32 | 9 5/16 |
| | 3 | 2 1/4-12 | 2 3/4-12 | 3 1/2 | 3 3/4 | 1 | 2 5/8 | 7/8 | 5 7/16 | 17/32 | 3 3/8 | 3 11/32 | 9 5/16 |
| | 3 1/2 | 2 1/2-12 | 3 1/4-12 | 3 1/2 | 4 1/4 | 1 | 3 | 15/16 | 5 15/16 | 17/32 | 3 3/8 | 3 11/32 | 9 5/16 |
| 6 | 2 1/2 | 1 7/8-12 | 2 1/4-12 | 3 | 3 1/8 | 1 | 2 1/16 | 5/8 | 4 1/4 | 21/32 | 3 1/2 | 3 19/32 | 10 9/16 |
| | 3 | 2 1/4-12 | 2 3/4-12 | 3 1/2 | 3 3/4 | 1 | 2 5/8 | 7/8 | 5 7/16 | 17/32 | 3 1/2 | 3 19/32 | 10 9/16 |
| | 3 1/2 | 2 1/2-12 | 3 1/4-12 | 3 1/2 | 4 1/4 | 1 | 3 | 15/16 | 5 15/16 | 17/32 | 3 1/2 | 3 19/32 | 10 9/16 |
| | 4 | 3-12 | 3 3/4-12 | 4 | 4 3/4 | 1 | 3 3/8 | 15/16 | 6 5/16 | 3/8 | 3 1/2 | 3 19/32 | 10 9/16 |
| 7 | 3 | 2 1/4-12 | 2 3/4-12 | 3 1/2 | 3 3/4 | 1 | 2 5/8 | 7/8 | 5 7/16 | 17/32 | 3 13/16 | 3 15/16 | 11 3/4 |
| | 3 1/2 | 2 1/2-12 | 3 1/4-12 | 3 1/2 | 4 1/4 | 1 | 3 | 15/16 | 5 15/16 | 17/32 | 3 13/16 | 3 15/16 | 11 3/4 |
| | 4 | 3-12 | 3 3/4-12 | 4 | 4 3/4 | 1 | 3 3/8 | 15/16 | 6 5/16 | 3/8 | 3 13/16 | 3 15/16 | 11 3/4 |
| | 4 1/2 | 3 1/4-12 | 4 1/4-12 | 4 1/2 | 5 1/4 | 1 | 3 7/8 | 15/16 | 6 15/16 | 3/8 | 3 13/16 | 3 15/16 | 11 3/4 |
| | 5 | 3 1/2-12 | 4 3/4-12 | 5 | 5 3/4 | 1 | 4 1/4 | 15/16 | 7 7/16 | 3/8 | 3 13/16 | 3 15/16 | 11 3/4 |
| 8 | 3 1/2 | 2 1/2-12 | 3 1/4-12 | 3 1/2 | 4 1/4 | 1 | 3 | 15/16 | 5 15/16 | 17/32 | 3 15/16 | 4 1/16 | 12 7/8 |
| | 4 | 3-12 | 3 3/4-12 | 4 | 4 3/4 | 1 | 3 3/8 | 15/16 | 6 5/16 | 3/8 | 3 15/16 | 4 1/16 | 12 7/8 |
| | 4 1/2 | 3 1/4-12 | 4 1/4-12 | 4 1/2 | 5 1/4 | 1 | 3 7/8 | 15/16 | 6 15/16 | 3/8 | 3 15/16 | 4 1/16 | 12 7/8 |
| | 5 | 3 1/2-12 | 4 3/4-12 | 5 | 5 3/4 | 1 | 4 1/4 | 15/16 | 7 7/16 | 3/8 | 3 15/16 | 4 1/16 | 12 7/8 |
| | 5 1/2 | 4-12 | 5 1/4-12 | 5 1/2 | 6 1/4 | 1 | 4 5/8 | 15/16 | 7 15/16 | 3/8 | 3 15/16 | 4 1/16 | 12 7/8 |

## NFPA MS7 - End Lugs

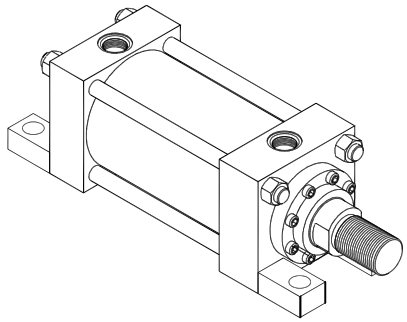

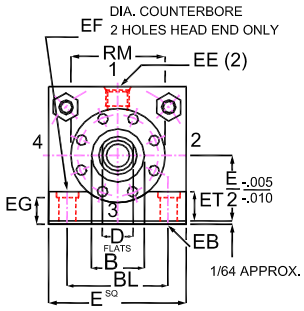


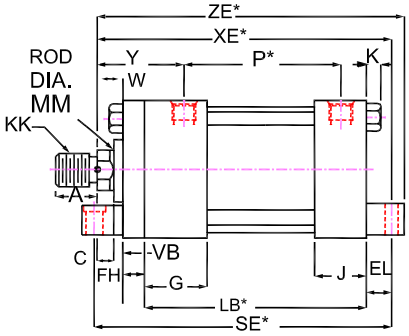


* Add stroke to starred dimension

## Body Dimensions

| BORE | E | EE (SAE) | EE (NPTF) | G | J | K | LB* | P* | BL | EB | EF | EG | EL | ET | FH | SE* |
|---|---|---|---|---|---|---|---|---|---|---|---|---|---|---|---|---|
| 1 1/2 | 2 1/2 | 8 | 1/2 | 1 3/4 | 1 1/2 | 3/8 | 4 5/8 | 2 11/16 | 1.63 | 7/16 | 5/8 | 11/16 | 7/8 | 7/8 | 3/8 | 6 3/4 |
| 2 | 3 | 8 | 1/2 | 1 3/4 | 1 1/2 | 7/16 | 4 5/8 | 2 11/16 | 2.07 | 9/16 | 13/16 | 3/4 | 15/16 | 1 | 5/8 | 7 1/8 |
| 2 1/2 | 3 1/2 | 8 | 1/2 | 1 3/4 | 1 1/2 | 7/16 | 4 3/4 | 2 13/16 | 2.56 | 9/16 | 13/16 | 3/4 | 15/16 | 1 | 5/8 | 7 1/4 |
| 3 1/4 | 4 1/2 | 12 | 3/4 | 2 | 1 3/4 | 9/16 | 5 1/2 | 3 9/16 | 3.27 | 11/16 | 1 | 1 1/16 | 1 1/8 | 1 1/4 | 3/4 | 8 1/2 |
| 4 | 5 | 12 | 3/4 | 2 | 1 3/4 | 9/16 | 5 3/4 | 3 13/16 | 3.84 | 11/16 | 1 | 7/8 | 1 1/8 | 1 1/4 | 7/8 | 8 7/8 |
| 5 | 6 1/2 | 12 | 3/4 | 2 | 1 3/4 | 13/16 | 6 1/4 | 4 5/16 | 4.95 | 15/16 | 1 3/8 | 1 1/4 | 1 1/2 | 1 1/2 | 7/8 | 10 1/8 |
| 6 | 7 1/2 | 16 | 1 | 2 1/4 | 2 1/4 | 15/16 | 7 3/8 | 4 11/16 | 5.74 | 1 1/16 | 1 5/8 | 1 1/2 | 1 11/16 | 1 3/4 | 1 | 11 3/4 |
| 7 | 8 1/2 | 20 | 1 1/4 | 2 3/4 | 2 3/4 | 1 | 8 1/2 | 5 1/8 | 6.58 | 1 3/16 | 1 5/8 | 1 1/2 | 1 13/16 | 2 | 1 | 13 1/8 |
| 8 | 9 1/2 | 24 | 1 1/2 | 3 | 3 | 1 1/8 | 9 1/2 | 5 7/8 | 7.51 | 1 5/16 | 2 3/32 | 1 3/4 | 2 | 2 | 1 | 14 1/2 |

## Rod End Dimensions

| BORE | M M | KK | CC | A | B -.001/ -.003 | C | D | F | RM | VB | W | XE* | Y | ZB* | ZE* |
|---|---|---|---|---|---|---|---|---|---|---|---|---|---|---|---|
| 1 1/2 | 5/8 | 7/16-20 | 1/2-20 | 3/4 | 1 1/8 | 3/8 | 1/2 | 3/8 | 1 15/16 | 1/4 | 5/8 | 6 1/2 | 2 15/32 | 6 | 6 7/8 |
| | 1 | 3/4-16 | 7/8-14 | 1 1/8 | 1 1/2 | 1/2 | 7/8 | 3/8 | 2 3/8 | 1/2 | 1 | 6 7/8 | 2 15/32 | 6 3/8 | 7 1/4 |
| 2 | 1 | 3/4-16 | 7/8-14 | 1 1/8 | 1 1/2 | 1/2 | 7/8 | 3/8 | 2 3/8 | 1/4 | 3/4 | 6 15/16 | 2 15/32 | 6 7/16 | 7 7/16 |
| | 1 3/8 | 1-14 | 1 1/4-12 | 1 5/8 | 2 | 5/8 | 1 1/8 | 3/8 | 2 7/8 | 3/8 | 1 | 7 3/16 | 2 23/32 | 6 11/16 | 7 11/16 |
| 2 1/2 | 1 | 3/4-16 | 7/8-14 | 1 1/8 | 1 1/2 | 1/2 | 7/8 | 3/8 | 2 3/8 | 1/4 | 3/4 | 7 1/16 | 2 15/32 | 6 9/16 | 7 9/16 |
| | 1 3/8 | 1-14 | 1 1/4-12 | 1 5/8 | 2 | 5/8 | 1 1/8 | 3/8 | 2 7/8 | 3/8 | 1 | 7 5/16 | 2 23/32 | 6 13/16 | 7 13/16 |
| | 1 3/4 | 1 1/4-12 | 1 1/2-12 | 2 | 2 3/8 | 3/4 | 1 1/2 | 5/8 | 3 15/32 | 1/2 | 1 1/4 | 7 9/16 | 2 31/32 | 7 1/16 | 8 1/16 |
| 3 1/4 | 1 3/8 | 1-14 | 1 1/4-12 | 1 5/8 | 2 | 5/8 | 1 1/8 | 3/8 | 2 7/8 | 1/4 | 7/8 | 8 1/4 | 2 23/32 | 7 11/16 | 8 7/8 |
| | 1 3/4 | 1 1/4-12 | 1 1/2-12 | 2 | 2 3/8 | 3/4 | 1 1/2 | 5/8 | 3 15/32 | 3/8 | 1 1/8 | 8 1/2 | 2 31/32 | 7 15/16 | 9 1/8 |
| | 2 | 1 1/2-12 | 1 3/4-12 | 2 1/4 | 2 5/8 | 7/8 | 1 11/16 | 5/8 | 3 23/32 | 3/8 | 1 1/4 | 8 5/8 | 3 3/32 | 8 1/16 | 9 1/4 |
| 4 | 1 3/4 | 1 1/4-12 | 1 1/2-12 | 2 | 2 3/8 | 3/4 | 1 1/2 | 5/8 | 3 15/32 | 1/4 | 1 | 8 3/4 | 2 31/32 | 8 3/16 | 9 3/8 |
| | 2 | 1 1/2-12 | 1 3/4-12 | 2 1/4 | 2 5/8 | 7/8 | 1 11/16 | 5/8 | 3 23/32 | 1/4 | 1 1/8 | 8 7/8 | 3 3/32 | 8 5/16 | 9 1/2 |
| | 2 1/2 | 1 7/8-12 | 2 1/4-12 | 3 | 3 1/8 | 1 | 2 1/16 | 5/8 | 4 1/4 | 3/8 | 1 3/8 | 9 1/8 | 3 11/32 | 8 9/16 | 9 3/4 |
| 5 | 2 | 1 1/2-12 | 1 3/4-12 | 2 1/4 | 2 5/8 | 7/8 | 1 11/16 | 5/8 | 3 23/32 | 1/4 | 1 1/8 | 9 3/4 | 3 3/32 | 9 1/16 | 10 1/2 |
| | 2 1/2 | 1 7/8-12 | 2 1/4-12 | 3 | 3 1/8 | 1 | 2 1/16 | 5/8 | 4 1/4 | 3/8 | 1 3/8 | 10 | 3 11/32 | 9 5/16 | 10 3/4 |
| | 3 | 2 1/4-12 | 2 3/4-12 | 3 1/2 | 3 3/4 | 1 | 2 5/8 | 7/8 | 5 7/16 | 3/8 | 1 3/8 | 10 | 3 11/32 | 9 5/16 | 10 3/4 |
| | 3 1/2 | 2 1/2-12 | 3 1/4-12 | 3 1/2 | 4 1/4 | 1 | 3 | 15/16 | 5 15/16 | 3/8 | 1 3/8 | 10 | 3 11/32 | 9 5/16 | 10 3/4 |
| 6 | 2 1/2 | 1 7/8-12 | 2 1/4-12 | 3 | 3 1/8 | 1 | 2 1/16 | 5/8 | 4 1/4 | 1/4 | 1 1/4 | 11 5/16 | 3 19/32 | 10 9/16 | 12 3/16 |
| | 3 | 2 1/4-12 | 2 3/4-12 | 3 1/2 | 3 3/4 | 1 | 2 5/8 | 7/8 | 5 7/16 | 1/4 | 1 1/4 | 11 5/16 | 3 19/32 | 10 9/16 | 12 3/16 |
| | 3 1/2 | 2 1/2-12 | 3 1/4-12 | 3 1/2 | 4 1/4 | 1 | 3 | 15/16 | 5 15/16 | 1/4 | 1 1/4 | 11 5/16 | 3 19/32 | 10 9/16 | 12 3/16 |
| | 4 | 3-12 | 3 3/4-12 | 4 | 4 3/4 | 1 | 3 3/8 | 15/16 | 6 5/16 | 1/4 | 1 1/4 | 11 5/16 | 3 19/32 | 10 9/16 | 12 3/16 |
| 7 | 3 | 2 1/4-12 | 2 3/4-12 | 3 1/2 | 3 3/4 | 1 | 2 5/8 | 7/8 | 5 7/16 | 1/4 | 1 1/4 | 12 9/16 | 3 15/16 | 11 3/4 | 13 9/16 |
| | 3 1/2 | 2 1/2-12 | 3 1/4-12 | 3 1/2 | 4 1/4 | 1 | 3 | 15/16 | 5 15/16 | 1/4 | 1 1/4 | 12 9/16 | 3 15/16 | 11 3/4 | 13 9/16 |
| | 4 | 3-12 | 3 3/4-12 | 4 | 4 3/4 | 1 | 3 3/8 | 15/16 | 6 5/16 | 1/4 | 1 1/4 | 12 9/16 | 3 15/16 | 11 3/4 | 13 9/16 |
| | 4 1/2 | 3 1/4-12 | 4 1/4-12 | 4 1/2 | 5 1/4 | 1 | 3 7/8 | 15/16 | 6 15/16 | 1/4 | 1 1/4 | 12 9/16 | 3 15/16 | 11 3/4 | 13 9/16 |
| | 5 | 3 1/2-12 | 4 3/4-12 | 5 | 5 3/4 | 1 | 4 1/4 | 15/16 | 7 7/16 | 1/4 | 1 1/4 | 12 9/16 | 3 15/16 | 11 3/4 | 13 9/16 |
| 8 | 3 1/2 | 2 1/2-12 | 3 1/4-12 | 3 1/2 | 4 1/4 | 1 | 3 | 15/16 | 5 15/16 | 1/4 | 1 1/4 | 13 3/4 | 4 1/16 | 12 7/8 | 14 7/8 |
| | 4 | 3-12 | 3 3/4-12 | 4 | 4 3/4 | 1 | 3 3/8 | 15/16 | 6 5/16 | 1/4 | 1 1/4 | 13 3/4 | 4 1/16 | 12 7/8 | 14 7/8 |
| | 4 1/2 | 3 1/4-12 | 4 1/4-12 | 4 1/2 | 5 1/4 | 1 | 3 7/8 | 15/16 | 6 15/16 | 1/4 | 1 1/4 | 13 3/4 | 4 1/16 | 12 7/8 | 14 7/8 |
| | 5 | 3 1/2-12 | 4 3/4-12 | 5 | 5 3/4 | 1 | 4 1/4 | 15/16 | 7 7/16 | 1/4 | 1 1/4 | 13 3/4 | 4 1/16 | 12 7/8 | 14 7/8 |
| | 5 1/2 | 4-12 | 5 1/4-12 | 5 1/2 | 6 1/4 | 1 | 4 5/8 | 15/16 | 7 15/16 | 1/4 | 1 1/4 | 13 3/4 | 4 1/16 | 12 7/8 | 14 7/8 |

## NFPA MT1 - Head Trunnion

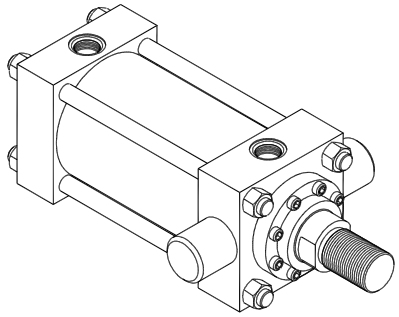

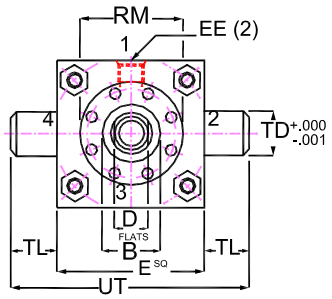


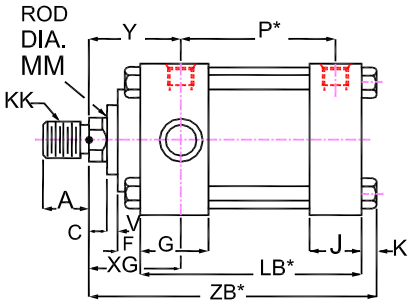


* Add stroke to starred dimension

### Body Dimensions

| BORE | E | EE (SAE) | EE (NPTF) | G | J | K | LB* | P* | TD | TL | UT |
|---|---|---|---|---|---|---|---|---|---|---|---|
| 1 1/2 | 2 1/2 | 8 | 1/2 | 1 3/4 | 1 1/2 | 3/8 | 4 5/8 | 2 11/16 | 1 | 1 | 4 1/2 |
| 2 | 3 | 8 | 1/2 | 1 3/4 | 1 1/2 | 7/16 | 4 5/8 | 2 11/16 | 1 3/8 | 1 3/8 | 5 3/4 |
| 2 1/2 | 3 1/2 | 8 | 1/2 | 1 3/4 | 1 1/2 | 7/16 | 4 3/4 | 2 13/16 | 1 3/8 | 1 3/8 | 6 1/4 |
| 3 1/4 | 4 1/2 | 12 | 3/4 | 2 | 1 3/4 | 9/16 | 5 1/2 | 3 9/16 | 1 3/4 | 1 3/4 | 8 |
| 4 | 5 | 12 | 3/4 | 2 | 1 3/4 | 9/16 | 5 3/4 | 3 13/16 | 1 3/4 | 1 3/4 | 8 1/2 |
| 5 | 6 1/2 | 12 | 3/4 | 2 | 1 3/4 | 13/16 | 6 1/4 | 4 5/16 | 1 3/4 | 1 3/4 | 10 |
| 6 | 7 1/2 | 16 | 1 | 2 1/4 | 2 1/4 | 15/16 | 7 3/8 | 4 11/16 | 2 | 2 | 11 1/2 |
| 7 | 8 1/2 | 20 | 1 1/4 | 2 3/4 | 2 3/4 | 1 | 8 1/2 | 5 1/8 | 2 1/2 | 2 1/2 | 13 1/2 |
| 8 | 9 1/2 | 24 | 1 1/2 | 3 | 3 | 1 1/8 | 9 1/2 | 5 7/8 | 3 | 3 | 15 1/2 |

### Rod End Dimensions

| BORE | M M | KK | CC | A | B -.001/ -.003 | C | D | F | RM | V | XG | Y | ZB* |
|---|---|---|---|---|---|---|---|---|---|---|---|---|---|
| 1 1/2 | 5/8 | 7/16-20 | 1/2-20 | 3/4 | 1 1/8 | 3/8 | 1/2 | 3/8 | 1 15/16 | 1 /4 | 1 7/8 | 2 15/32 | 6 |
| | 1 | 3/4-16 | 7/8-14 | 1 1/8 | 1 1/2 | 1/2 | 7/8 | 3/8 | 2 3/8 | 1/2 | 2 1/4 | 2 15/32 | 6 3/8 |
| 2 | 1 | 3/4-16 | 7/8-14 | 1 1/8 | 1 1/2 | 1/2 | 7/8 | 3/8 | 2 3/8 | 1 /4 | 2 1/4 | 2 15/32 | 6 7/16 |
| | 1 3/8 | 1-14 | 1 1/4-12 | 1 5/8 | 2 | 5/8 | 1 1/8 | 3/8 | 2 7/8 | 3/8 | 2 1/2 | 2 23/32 | 6 11/16 |
| 2 1/2 | 1 | 3/4-16 | 7/8-14 | 1 1/8 | 1 1/2 | 1/2 | 7/8 | 3/8 | 2 3/8 | 3/8 | 2 1/4 | 2 15/32 | 6 9/16 |
| | 1 3/8 | 1-14 | 1 1/4-12 | 1 5/8 | 2 | 5/8 | 1 1/8 | 3/8 | 2 7/8 | 3/8 | 2 1/2 | 2 23/32 | 6 13/16 |
| | 1 3/4 | 1 1/4-12 | 1 1/2-12 | 2 | 2 3/8 | 3/4 | 1 1/2 | 5/8 | 3 15/32 | 1/2 | 2 3/4 | 2 31/32 | 7 1/16 |
| 3 1/4 | 1 3/8 | 1-14 | 1 1/4-12 | 1 5/8 | 2 | 5/8 | 1 1/8 | 3/8 | 2 7/8 | 13/32 | 2 5/8 | 2 23/32 | 7 11/16 |
| | 1 3/4 | 1 1/4-12 | 1 1/2-12 | 2 | 2 3/8 | 3/4 | 1 1/2 | 5/8 | 3 15/32 | 3/8 | 2 7/8 | 2 31/32 | 7 15/16 |
| | 2 | 1 1/2-12 | 1 3/4-12 | 2 1/4 | 2 5/8 | 7/8 | 1 11/16 | 5/8 | 3 23/32 | 3/8 | 3 | 3 3/32 | 8 1/16 |
| 4 | 1 3/4 | 1 1/4-12 | 1 1/2-12 | 2 | 2 3/8 | 3/4 | 1 1/2 | 5/8 | 3 15/32 | 17/32 | 2 7/8 | 2 31/32 | 8 3/16 |
| | 2 | 1 1/2-12 | 1 3/4-12 | 2 1/4 | 2 5/8 | 7/8 | 1 11/16 | 5/8 | 3 23/32 | 17/32 | 3 | 3 3/32 | 8 5/16 |
| | 2 1/2 | 1 7/8-12 | 2 1/4-12 | 3 | 3 1/8 | 1 | 2 1/16 | 5/8 | 4 1/4 | 21/32 | 3 1/4 | 3 11/32 | 8 9/16 |
| 5 | 2 | 1 1/2-12 | 1 3/4-12 | 2 1/4 | 2 5/8 | 7/8 | 1 11/16 | 5/8 | 3 23/32 | 17/32 | 3 | 3 3/32 | 9 1/16 |
| | 2 1/2 | 1 7/8-12 | 2 1/4-12 | 3 | 3 1/8 | 1 | 2 1/16 | 5/8 | 4 1/4 | 21/32 | 3 1/4 | 3 11/32 | 9 5/16 |
| | 3 | 2 1/4-12 | 2 3/4-12 | 3 1/2 | 3 3/4 | 1 | 2 5/8 | 7/8 | 5 7/16 | 17/32 | 3 1/4 | 3 11/32 | 9 5/16 |
| | 3 1/2 | 2 1/2-12 | 3 1/4-12 | 3 1/2 | 4 1/4 | 1 | 3 | 15/16 | 5 15/16 | 17/32 | 3 1/4 | 3 11/32 | 9 5/16 |
| 6 | 2 1/2 | 1 7/8-12 | 2 1/4-12 | 3 | 3 1/8 | 1 | 2 1/16 | 5/8 | 4 1/4 | 21/32 | 3 3/8 | 3 19/32 | 10 9/16 |
| | 3 | 2 1/4-12 | 2 3/4-12 | 3 1/2 | 3 3/4 | 1 | 2 5/8 | 7/8 | 5 7/16 | 17/32 | 3 3/8 | 3 19/32 | 10 9/16 |
| | 3 1/2 | 2 1/2-12 | 3 1/4-12 | 3 1/2 | 4 1/4 | 1 | 3 | 15/16 | 5 15/16 | 17/32 | 3 3/8 | 3 19/32 | 10 9/16 |
| | 4 | 3-12 | 3 3/4-12 | 4 | 4 3/4 | 1 | 3 3/8 | 15/16 | 6 5/16 | 3/8 | 3 3/8 | 3 19/32 | 10 9/16 |
| 7 | 3 | 2 1/4-12 | 2 3/4-12 | 3 1/2 | 3 3/4 | 1 | 2 5/8 | 7/8 | 5 7/16 | 17/32 | 3 5/8 | 3 15/32 | 11 3/4 |
| | 3 1/2 | 2 1/2-12 | 3 1/4-12 | 3 1/2 | 4 1/4 | 1 | 3 | 15/16 | 5 15/16 | 17/32 | 3 5/8 | 3 15/16 | 11 3/4 |
| | 4 | 3-12 | 3 3/4-12 | 4 | 4 3/4 | 1 | 3 3/8 | 15/16 | 6 5/16 | 3/8 | 3 5/8 | 3 15/16 | 11 3/4 |
| | 4 1/2 | 3 1/4-12 | 4 1/4-12 | 4 1/2 | 5 1/4 | 1 | 3 7/8 | 15/16 | 6 15/16 | 3/8 | 3 5/8 | 3 15/16 | 11 3/4 |
| | 5 | 3 1/2-12 | 4 3/4-12 | 5 | 5 3/4 | 1 | 4 1/4 | 15/16 | 7 7/16 | 3/8 | 3 5/8 | 3 15/16 | 11 3/4 |
| 8 | 3 1/2 | 2 1/2-12 | 3 1/4-12 | 3 1/2 | 4 1/4 | 1 | 3 | 15/16 | 5 15/16 | 17/32 | 3 3/4 | 4 1/16 | 12 7/8 |
| | 4 | 3-12 | 3 3/4-12 | 4 | 4 3/4 | 1 | 3 3/8 | 15/16 | 6 5/16 | 3/8 | 3 3/4 | 4 1/16 | 12 7/8 |
| | 4 1/2 | 3 1/4-12 | 4 1/4-12 | 4 1/2 | 5 1/4 | 1 | 3 7/8 | 15/16 | 6 15/16 | 3/8 | 3 3/4 | 4 1/16 | 12 7/8 |
| | 5 | 3 1/2-12 | 4 3/4-12 | 5 | 5 3/4 | 1 | 4 1/4 | 15/16 | 7 7/16 | 3/8 | 3 3/4 | 4 1/16 | 12 7/8 |
| | 5 1/2 | 4-12 | 5 1/4-12 | 5 1/2 | 6 1/4 | 1 | 4 5/8 | 15/16 | 7 15/16 | 3/8 | 3 3/4 | 4 1/16 | 12 7/8 |

## NFPA MT2 - Cap Trunnion

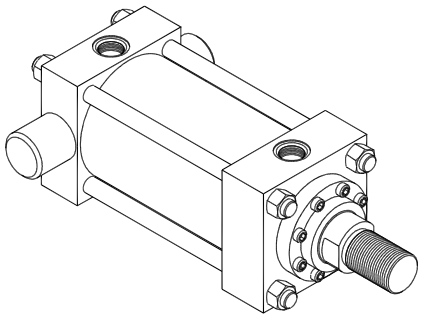

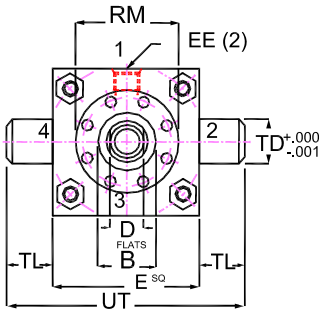


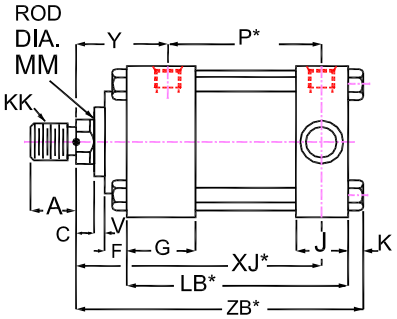


* Add stroke to starred dimension

### Body Dimensions

| BORE | E | EE (SAE) | EE (NPTF) | G | J | K | LB* | P* | TD | TL | UT |
|---|---|---|---|---|---|---|---|---|---|---|---|
| 1 1/2 | 2 1/2 | 8 | 1/2 | 1 3/4 | 1 1/2 | 3/8 | 4 5/8 | 2 11/16 | 1 | 1 | 4 1/2 |
| 2 | 3 | 8 | 1/2 | 1 3/4 | 1 1/2 | 7/16 | 4 5/8 | 2 11/16 | 1 3/8 | 1 3/8 | 5 3/4 |
| 2 1/2 | 3 1/2 | 8 | 1/2 | 1 3/4 | 1 1/2 | 7/16 | 4 3/4 | 2 13/16 | 1 3/8 | 1 3/8 | 6 1/4 |
| 3 1/4 | 4 1/2 | 12 | 3/4 | 2 | 1 3/4 | 9/16 | 5 1/2 | 3 9/16 | 1 3/4 | 1 3/4 | 8 |
| 4 | 5 | 12 | 3/4 | 2 | 1 3/4 | 9/16 | 5 3/4 | 3 13/16 | 1 3/4 | 1 3/4 | 8 1/2 |
| 5 | 6 1/2 | 12 | 3/4 | 2 | 1 3/4 | 13/16 | 6 1/4 | 4 5/16 | 1 3/4 | 1 3/4 | 10 |
| 6 | 7 1/2 | 16 | 1 | 2 1/4 | 2 1/4 | 15/16 | 7 3/8 | 4 11/16 | 2 | 2 | 11 1/2 |
| 7 | 8 1/2 | 20 | 1 1/4 | 2 3/4 | 2 3/4 | 1 | 8 1/2 | 5 1/8 | 2 1/2 | 2 1/2 | 13 1/2 |
| 8 | 9 1/2 | 24 | 1 1/2 | 3 | 3 | 1 1/8 | 9 1/2 | 5 7/8 | 3 | 3 | 15 1/2 |

### Rod End Dimensions

| BORE | M M | KK | CC | A | B -.001/ -.003 | C | D | F | RM | V | XJ* | Y | ZB* |
|---|---|---|---|---|---|---|---|---|---|---|---|---|---|
| 1 1/2 | 5/8 | 7/16-20 | 1/2-20 | 3/4 | 1 1/8 | 3/8 | 1/2 | 3/8 | 1 15/16 | 1 /4 | 4 7/8 | 2 15/32 | 6 |
| | 1 | 3/4-16 | 7/8-14 | 1 1/8 | 1 1/2 | 1/2 | 7/8 | 3/8 | 2 3/8 | 1/2 | 5 1/4 | 2 15/32 | 6 3/8 |
| 2 | 1 | 3/4-16 | 7/8-14 | 1 1/8 | 1 1/2 | 1/2 | 7/8 | 3/8 | 2 3/8 | 1 /4 | 5 1/4 | 2 15/32 | 6 7/16 |
| | 1 3/8 | 1-14 | 1 1/4-12 | 1 5/8 | 2 | 5/8 | 1 1/8 | 3/8 | 2 7/8 | 3/8 | 5 1/2 | 2 23/32 | 6 11/16 |
| 2 1/2 | 1 | 3/4-16 | 7/8-14 | 1 1/8 | 1 1/2 | 1/2 | 7/8 | 3/8 | 2 3/8 | 3/8 | 5 3/8 | 2 15/32 | 6 9/16 |
| | 1 3/8 | 1-14 | 1 1/4-12 | 1 5/8 | 2 | 5/8 | 1 1/8 | 3/8 | 2 7/8 | 3/8 | 5 5/8 | 2 23/32 | 6 13/16 |
| | 1 3/4 | 1 1/4-12 | 1 1/2-12 | 2 | 2 3/8 | 3/4 | 1 1/2 | 5/8 | 3 15/32 | 1/2 | 5 7/8 | 2 31/32 | 7 1/16 |
| 3 1/4 | 1 3/8 | 1-14 | 1 1/4-12 | 1 5/8 | 2 | 5/8 | 1 1/8 | 3/8 | 2 7/8 | 13/32 | 6 1/4 | 2 23/32 | 7 11/16 |
| | 1 3/4 | 1 1/4-12 | 1 1/2-12 | 2 | 2 3/8 | 3/4 | 1 1/2 | 5/8 | 3 15/32 | 3/8 | 6 1/2 | 2 31/32 | 7 15/16 |
| | 2 | 1 1/2-12 | 1 3/4-12 | 2 1/4 | 2 5/8 | 7/8 | 1 11/16 | 5/8 | 3 23/32 | 3/8 | 6 5/8 | 3 3/32 | 8 1/16 |
| 4 | 1 3/4 | 1 1/4-12 | 1 1/2-12 | 2 | 2 3/8 | 3/4 | 1 1/2 | 5/8 | 3 15/32 | 17/32 | 6 3/4 | 2 31/32 | 8 3/16 |
| | 2 | 1 1/2-12 | 1 3/4-12 | 2 1/4 | 2 5/8 | 7/8 | 1 11/16 | 5/8 | 3 23/32 | 17/32 | 6 7/8 | 3 3/32 | 8 5/16 |
| | 2 1/2 | 1 7/8-12 | 2 1/4-12 | 3 | 3 1/8 | 1 | 2 1/16 | 5/8 | 4 1/4 | 21/32 | 7 1/8 | 3 11/32 | 8 9/16 |
| 5 | 2 | 1 1/2-12 | 1 3/4-12 | 2 1/4 | 2 5/8 | 7/8 | 1 11/16 | 5/8 | 3 23/32 | 17/32 | 7 3/8 | 3 3/32 | 9 1/16 |
| | 2 1/2 | 1 7/8-12 | 2 1/4-12 | 3 | 3 1/8 | 1 | 2 1/16 | 5/8 | 4 1/4 | 21/32 | 7 5/8 | 3 11/32 | 9 5/16 |
| | 3 | 2 1/4-12 | 2 3/4-12 | 3 1/2 | 3 3/4 | 1 | 2 5/8 | 7/8 | 5 7/16 | 17/32 | 7 5/8 | 3 11/32 | 9 5/16 |
| | 3 1/2 | 2 1/2-12 | 3 1/4-12 | 3 1/2 | 4 1/4 | 1 | 3 | 15/16 | 5 15/16 | 17/32 | 7 5/8 | 3 11/32 | 9 5/16 |
| 6 | 2 1/2 | 1 7/8-12 | 2 1/4-12 | 3 | 3 1/8 | 1 | 2 1/16 | 5/8 | 4 1/4 | 21/32 | 8 3/8 | 3 19/32 | 10 9/16 |
| | 3 | 2 1/4-12 | 2 3/4-12 | 3 1/2 | 3 3/4 | 1 | 2 5/8 | 7/8 | 5 7/16 | 17/32 | 8 3/8 | 3 19/32 | 10 9/16 |
| | 3 1/2 | 2 1/2-12 | 3 1/4-12 | 3 1/2 | 4 1/4 | 1 | 3 | 15/16 | 5 15/16 | 17/32 | 8 3/8 | 3 19/32 | 10 9/16 |
| | 4 | 3-12 | 3 3/4-12 | 4 | 4 3/4 | 1 | 3 3/8 | 15/16 | 6 5/16 | 3/8 | 8 3/8 | 3 19/32 | 10 9/16 |
| 7 | 3 | 2 1/4-12 | 2 3/4-12 | 3 1/2 | 3 3/4 | 1 | 2 5/8 | 7/8 | 5 7/16 | 17/32 | 9 3/8 | 3 15/32 | 11 3/4 |
| | 3 1/2 | 2 1/2-12 | 3 1/4-12 | 3 1/2 | 4 1/4 | 1 | 3 | 15/16 | 5 15/16 | 17/32 | 9 3/8 | 3 15/16 | 11 3/4 |
| | 4 | 3-12 | 3 3/4-12 | 4 | 4 3/4 | 1 | 3 3/8 | 15/16 | 6 5/16 | 3/8 | 9 3/8 | 3 15/16 | 11 3/4 |
| | 4 1/2 | 3 1/4-12 | 4 1/4-12 | 4 1/2 | 5 1/4 | 1 | 3 7/8 | 15/16 | 6 15/16 | 3/8 | 9 3/8 | 3 15/16 | 11 3/4 |
| | 5 | 3 1/2-12 | 4 3/4-12 | 5 | 5 3/4 | 1 | 4 1/4 | 15/16 | 7 7/16 | 3/8 | 9 3/8 | 3 15/16 | 11 3/4 |
| 8 | 3 1/2 | 2 1/2-12 | 3 1/4-12 | 3 1/2 | 4 1/4 | 1 | 3 | 15/16 | 5 15/16 | 17/32 | 10 1/4 | 4 1/16 | 12 7/8 |
| | 4 | 3-12 | 3 3/4-12 | 4 | 4 3/4 | 1 | 3 3/8 | 15/16 | 6 5/16 | 3/8 | 10 1/4 | 4 1/16 | 12 7/8 |
| | 4 1/2 | 3 1/4-12 | 4 1/4-12 | 4 1/2 | 5 1/4 | 1 | 3 7/8 | 15/16 | 6 15/16 | 3/8 | 10 1/4 | 4 1/16 | 12 7/8 |
| | 5 | 3 1/2-12 | 4 3/4-12 | 5 | 5 3/4 | 1 | 4 1/4 | 15/16 | 7 7/16 | 3/8 | 10 1/4 | 4 1/16 | 12 7/8 |
| | 5 1/2 | 4-12 | 5 1/4-12 | 5 1/2 | 6 1/4 | 1 | 4 5/8 | 15/16 | 7 15/16 | 3/8 | 10 1/4 | 4 1/16 | 12 7/8 |

## NFPA MT4 - Intermediate Trunnion

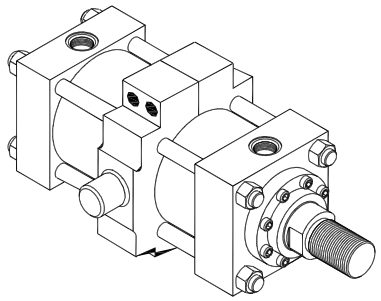

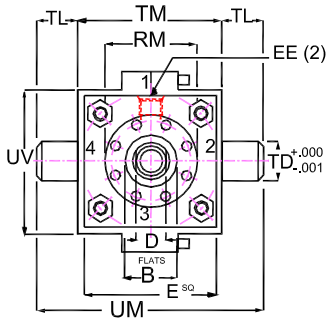


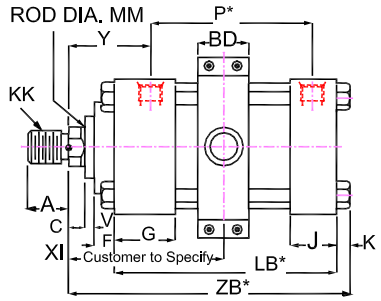


* Add stroke to starred dimension

### Body Dimensions

| BORE | E | EE (SAE) | EE (NPTF) | G | J | K | LB* | P* | BD | TD | TM |
|---|---|---|---|---|---|---|---|---|---|---|---|
| 1 1/2 | 2 1/2 | 8 | 1/2 | 1 3/4 | 1 1/2 | 3/8 | 4 5/8 | 2 11/16 | 1 1/2 | 1 | 3 |
| 2 | 3 | 8 | 1/2 | 1 3/4 | 1 1/2 | 7/16 | 4 5/8 | 2 11/16 | 1 1/2 | 1 3/8 | 3 1/2 |
| 2 1/2 | 3 1/2 | 8 | 1/2 | 1 3/4 | 1 1/2 | 7/16 | 4 3/4 | 2 13/16 | 1 1/2 | 1 3/8 | 4 |
| 3 1/4 | 4 1/2 | 12 | 3/4 | 2 | 1 3/4 | 9/16 | 5 1/2 | 3 9/16 | 2 | 1 3/4 | 5 |
| 4 | 5 | 12 | 3/4 | 2 | 1 3/4 | 9/16 | 5 3/4 | 3 13/16 | 2 | 1 3/4 | 5 1/2 |
| 5 | 6 1/2 | 12 | 3/4 | 2 | 1 3/4 | 13/16 | 6 1/4 | 4 5/16 | 2 1/2 | 1 3/4 | 7 |
| 6 | 7 1/2 | 16 | 1 | 2 1/4 | 2 1/4 | 15/16 | 7 3/8 | 4 11/16 | 3 | 2 | 8 1/2 |
| 7 | 8 1/2 | 20 | 1 1/4 | 2 3/4 | 2 3/4 | 1 | 8 1/2 | 5 1/8 | 3 | 2 1/2 | 9 3/4 |
| 8 | 9 1/2 | 24 | 1 1/2 | 3 | 3 | 1 1/8 | 9 1/2 | 5 7/8 | 3 1/2 | 3 | 11 |

### Rod End Dimensions

| BORE | M M | KK | CC | A | B -.001/ -.003 | C | D | F | RM | V | Y | ZB* |
|---|---|---|---|---|---|---|---|---|---|---|---|---|
| 1 1/2 | 5/8 | 7/16-20 | 1/2-20 | 3/4 | 1 1/8 | 3/8 | 1/2 | 3/8 | 1 15/16 | 1 /4 | 2 15/32 | 6 |
| | 1 | 3/4-16 | 7/8-14 | 1 1/8 | 1 1/2 | 1/2 | 7/8 | 3/8 | 2 3/8 | 1/2 | 2 15/32 | 6 3/8 |
| 2 | 1 | 3/4-16 | 7/8-14 | 1 1/8 | 1 1/2 | 1/2 | 7/8 | 3/8 | 2 3/8 | 1 /4 | 2 15/32 | 6 7/16 |
| | 1 3/8 | 1-14 | 1 1/4-12 | 1 5/8 | 2 | 5/8 | 1 1/8 | 3/8 | 2 7/8 | 3/8 | 2 23/32 | 6 11/16 |
| 2 1/2 | 1 | 3/4-16 | 7/8-14 | 1 1/8 | 1 1/2 | 1/2 | 7/8 | 3/8 | 2 3/8 | 3/8 | 2 15/32 | 6 9/16 |
| | 1 3/8 | 1-14 | 1 1/4-12 | 1 5/8 | 2 | 5/8 | 1 1/8 | 3/8 | 2 7/8 | 3/8 | 2 23/32 | 6 13/16 |
| | 1 3/4 | 1 1/4-12 | 1 1/2-12 | 2 | 2 3/8 | 3/4 | 1 1/2 | 5/8 | 3 15/32 | 1/2 | 2 31/32 | 7 1/16 |
| 3 1/4 | 1 3/8 | 1-14 | 1 1/4-12 | 1 5/8 | 2 | 5/8 | 1 1/8 | 3/8 | 2 7/8 | 13/32 | 2 23/32 | 7 11/16 |
| | 1 3/4 | 1 1/4-12 | 1 1/2-12 | 2 | 2 3/8 | 3/4 | 1 1/2 | 5/8 | 3 15/32 | 3/8 | 2 31/32 | 7 15/16 |
| | 2 | 1 1/2-12 | 1 3/4-12 | 2 1/4 | 2 5/8 | 7/8 | 1 11/16 | 5/8 | 3 23/32 | 3/8 | 3 3/32 | 8 1/16 |
| 4 | 1 3/4 | 1 1/4-12 | 1 1/2-12 | 2 | 2 3/8 | 3/4 | 1 1/2 | 5/8 | 3 15/32 | 17/32 | 2 31/32 | 8 3/16 |
| | 2 | 1 1/2-12 | 1 3/4-12 | 2 1/4 | 2 5/8 | 7/8 | 1 11/16 | 5/8 | 3 23/32 | 17/32 | 3 3/32 | 8 5/16 |
| | 2 1/2 | 1 7/8-12 | 2 1/4-12 | 3 | 3 1/8 | 1 | 2 1/16 | 5/8 | 4 1/4 | 21/32 | 3 11/32 | 8 9/16 |
| 5 | 2 | 1 1/2-12 | 1 3/4-12 | 2 1/4 | 2 5/8 | 7/8 | 1 11/16 | 5/8 | 3 23/32 | 17/32 | 3 3/32 | 9 1/16 |
| | 2 1/2 | 1 7/8-12 | 2 1/4-12 | 3 | 3 1/8 | 1 | 2 1/16 | 5/8 | 4 1/4 | 21/32 | 3 11/32 | 9 5/16 |
| | 3 | 2 1/4-12 | 2 3/4-12 | 3 1/2 | 3 3/4 | 1 | 2 5/8 | 7/8 | 5 7/16 | 17/32 | 3 11/32 | 9 5/16 |
| | 3 1/2 | 2 1/2-12 | 3 1/4-12 | 3 1/2 | 4 1/4 | 1 | 3 | 15/16 | 5 15/16 | 17/32 | 3 11/32 | 9 5/16 |
| 6 | 2 1/2 | 1 7/8-12 | 2 1/4-12 | 3 | 3 1/8 | 1 | 2 1/16 | 5/8 | 4 1/4 | 21/32 | 3 19/32 | 10 9/16 |
| | 3 | 2 1/4-12 | 2 3/4-12 | 3 1/2 | 3 3/4 | 1 | 2 5/8 | 7/8 | 5 7/16 | 17/32 | 3 19/32 | 10 9/16 |
| | 3 1/2 | 2 1/2-12 | 3 1/4-12 | 3 1/2 | 4 1/4 | 1 | 3 | 15/16 | 5 15/16 | 17/32 | 3 19/32 | 10 9/16 |
| | 4 | 3-12 | 3 3/4-12 | 4 | 4 3/4 | 1 | 3 3/8 | 15/16 | 6 5/16 | 3/8 | 3 19/32 | 10 9/16 |
| 7 | 3 | 2 1/4-12 | 2 3/4-12 | 3 1/2 | 3 3/4 | 1 | 2 5/8 | 7/8 | 5 7/16 | 17/32 | 3 15/32 | 11 3/4 |
| | 3 1/2 | 2 1/2-12 | 3 1/4-12 | 3 1/2 | 4 1/4 | 1 | 3 | 15/16 | 5 15/16 | 17/32 | 3 15/16 | 11 3/4 |
| | 4 | 3-12 | 3 3/4-12 | 4 | 4 3/4 | 1 | 3 3/8 | 15/16 | 6 5/16 | 3/8 | 3 15/16 | 11 3/4 |
| | 4 1/2 | 3 1/4-12 | 4 1/4-12 | 4 1/2 | 5 1/4 | 1 | 3 7/8 | 15/16 | 6 15/16 | 3/8 | 3 15/16 | 11 3/4 |
| | 5 | 3 1/2-12 | 4 3/4-12 | 5 | 5 3/4 | 1 | 4 1/4 | 15/16 | 7 7/16 | 3/8 | 3 15/16 | 11 3/4 |
| 8 | 3 1/2 | 2 1/2-12 | 3 1/4-12 | 3 1/2 | 4 1/4 | 1 | 3 | 15/16 | 5 15/16 | 17/32 | 4 1/16 | 12 7/8 |
| | 4 | 3-12 | 3 3/4-12 | 4 | 4 3/4 | 1 | 3 3/8 | 15/16 | 6 5/16 | 3/8 | 4 1/16 | 12 7/8 |
| | 4 1/2 | 3 1/4-12 | 4 1/4-12 | 4 1/2 | 5 1/4 | 1 | 3 7/8 | 15/16 | 6 15/16 | 3/8 | 4 1/16 | 12 7/8 |
| | 5 | 3 1/2-12 | 4 3/4-12 | 5 | 5 3/4 | 1 | 4 1/4 | 15/16 | 7 7/16 | 3/8 | 4 1/16 | 12 7/8 |
| | 5 1/2 | 4-12 | 5 1/4-12 | 5 1/2 | 6 1/4 | 1 | 4 5/8 | 15/16 | 7 15/16 | 3/8 | 4 1/16 | 12 7/8 |

## NFPA MP1 - Cap Fixed Clevis

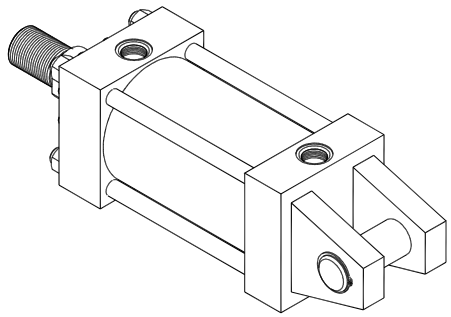

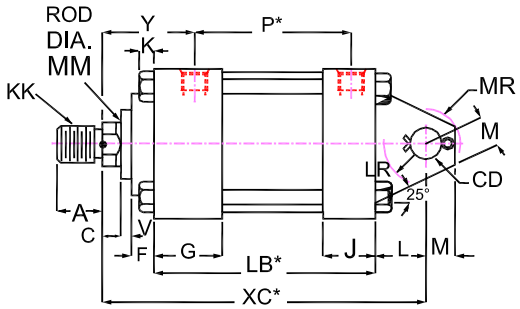


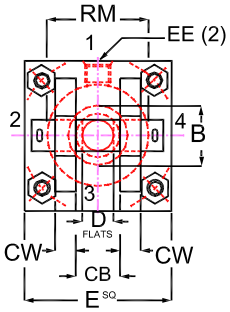


* Add stroke to starred dimension

### Body Dimensions

| BORE | E | EE (SAE) | EE (NPTF) | G | J | K | LB* | P* | CB | CD | CW | L | LR | M | MR |
|---|---|---|---|---|---|---|---|---|---|---|---|---|---|---|---|
| 1 1/2 | 2 1/2 | 8 | 1/2 | 1 3/4 | 1 1/2 | 3/8 | 4 5/8 | 2 11/16 | 3/4 | 1/2 | 1/2 | 3/4 | 9/16 | 1 /2 | 9/16 |
| 2 | 3 | 8 | 1/2 | 1 3/4 | 1 1/2 | 7/16 | 4 5/8 | 2 11/16 | 1 1/4 | 3/4 | 5/8 | 1 1/4 | 1 1/16 | 3/4 | 1 1/16 |
| 2 1/2 | 3 1/2 | 8 | 1/2 | 1 3/4 | 1 1/2 | 7/16 | 4 3/4 | 2 13/16 | 1 1/4 | 3/4 | 5/8 | 1 1/4 | 1 1/16 | 3/4 | 1 1/16 |
| 3 1/4 | 4 1/2 | 12 | 3/4 | 2 | 1 3/4 | 9/16 | 5 1/2 | 3 9/16 | 1 1/2 | 1 | 3/4 | 1 1/2 | 1 1/4 | 1 | 1 1/8 |
| 4 | 5 | 12 | 3/4 | 2 | 1 3/4 | 9/16 | 5 3/4 | 3 13/16 | 2 | 1 3/8 | 1 | 2 1/8 | 1 7/8 | 1 3/8 | 1 3/4 |
| 5 | 6 1/2 | 12 | 3/4 | 2 | 1 3/4 | 13/16 | 6 1/4 | 4 5/16 | 2 1/2 | 1 3/4 | 1 1/4 | 2 1/4 | 1 15/16 | 1 3/4 | 1 7/8 |
| 6 | 7 1/2 | 16 | 1 | 2 1/4 | 2 1/4 | 15/16 | 7 3/8 | 4 11/16 | 2 1/2 | 2 | 1 1/4 | 2 1/2 | 2 1/16 | 2 | 2 1/8 |
| 7 | 8 1/2 | 20 | 1 1/4 | 2 3/4 | 2 3/4 | 1 | 8 1/2 | 5 1/8 | 3 | 2 1/2 | 1 1/2 | 3 | 2 9/16 | 2 1/2 | 2 1/2 |
| 8 | 9 1/2 | 24 | 1 1/2 | 3 | 3 | 1 1/8 | 9 1/2 | 5 7/8 | 3 | 3 | 1 1/2 | 3 1/4 | 2 11/16 | 2 3/4 | 2 3/4 |

### Rod End Dimensions

| BORE | M M | KK | CC | A | B -.001/ -.003 | C | D | F | RM | V | Y | XC* |
|---|---|---|---|---|---|---|---|---|---|---|---|---|
| 1 1/2 | 5/8 | 7/16-20 | 1/2-20 | 3/4 | 1 1/8 | 3/8 | 1/2 | 3/8 | 1 15/16 | 1 /4 | 2 15/32 | 6 3/8 |
| | 1 | 3/4-16 | 7/8-14 | 1 1/8 | 1 1/2 | 1/2 | 7/8 | 3/8 | 2 3/8 | 1/2 | 2 15/32 | 6 3/4 |
| 2 | 1 | 3/4-16 | 7/8-14 | 1 1/8 | 1 1/2 | 1/2 | 7/8 | 3/8 | 2 3/8 | 1 /4 | 2 15/32 | 7 1/4 |
| | 1 3/8 | 1-14 | 1 1/4-12 | 1 5/8 | 2 | 5/8 | 1 1/8 | 3/8 | 2 7/8 | 3/8 | 2 23/32 | 7 1/2 |
| 2 1/2 | 1 | 3/4-16 | 7/8-14 | 1 1/8 | 1 1/2 | 1/2 | 7/8 | 3/8 | 2 3/8 | 3/8 | 2 15/32 | 7 3/8 |
| | 1 3/8 | 1-14 | 1 1/4-12 | 1 5/8 | 2 | 5/8 | 1 1/8 | 3/8 | 2 7/8 | 3/8 | 2 23/32 | 7 5/8 |
| | 1 3/4 | 1 1/4-12 | 1 1/2-12 | 2 | 2 3/8 | 3/4 | 1 1/2 | 5/8 | 3 15/32 | 1/2 | 2 31/32 | 7 7/8 |
| 3 1/4 | 1 3/8 | 1-14 | 1 1/4-12 | 1 5/8 | 2 | 5/8 | 1 1/8 | 3/8 | 2 7/8 | 13/32 | 2 23/32 | 8 5/8 |
| | 1 3/4 | 1 1/4-12 | 1 1/2-12 | 2 | 2 3/8 | 3/4 | 1 1/2 | 5/8 | 3 15/32 | 3/8 | 2 31/32 | 8 7/8 |
| | 2 | 1 1/2-12 | 1 3/4-12 | 2 1/4 | 2 5/8 | 7/8 | 1 11/16 | 5/8 | 3 23/32 | 3/8 | 3 3/32 | 9 |
| 4 | 1 3/4 | 1 1/4-12 | 1 1/2-12 | 2 | 2 3/8 | 3/4 | 1 1/2 | 5/8 | 3 15/32 | 17/32 | 2 31/32 | 9 3/4 |
| | 2 | 1 1/2-12 | 1 3/4-12 | 2 1/4 | 2 5/8 | 7/8 | 1 11/16 | 5/8 | 3 23/32 | 17/32 | 3 3/32 | 9 7/8 |
| | 2 1/2 | 1 7/8-12 | 2 1/4-12 | 3 | 3 1/8 | 1 | 2 1/16 | 5/8 | 4 1/4 | 21/32 | 3 11/32 | 10 1/8 |
| 5 | 2 | 1 1/2-12 | 1 3/4-12 | 2 1/4 | 2 5/8 | 7/8 | 1 11/16 | 5/8 | 3 23/32 | 17/32 | 3 3/32 | 10 1/2 |
| | 2 1/2 | 1 7/8-12 | 2 1/4-12 | 3 | 3 1/8 | 1 | 2 1/16 | 5/8 | 4 1/4 | 21/32 | 3 11/32 | 10 3/4 |
| | 3 | 2 1/4-12 | 2 3/4-12 | 3 1/2 | 3 3/4 | 1 | 2 5/8 | 7/8 | 5 7/16 | 17/32 | 3 11/32 | 10 3/4 |
| | 3 1/2 | 2 1/2-12 | 3 1/4-12 | 3 1/2 | 4 1/4 | 1 | 3 | 15/16 | 5 15/16 | 17/32 | 3 11/32 | 10 3/4 |
| 6 | 2 1/2 | 1 7/8-12 | 2 1/4-12 | 3 | 3 1/8 | 1 | 2 1/16 | 5/8 | 4 1/4 | 21/32 | 3 19/32 | 12 1/8 |
| | 3 | 2 1/4-12 | 2 3/4-12 | 3 1/2 | 3 3/4 | 1 | 2 5/8 | 7/8 | 5 7/16 | 17/32 | 3 19/32 | 12 1/8 |
| | 3 1/2 | 2 1/2-12 | 3 1/4-12 | 3 1/2 | 4 1/4 | 1 | 3 | 15/16 | 5 15/16 | 17/32 | 3 19/32 | 12 1/8 |
| | 4 | 3-12 | 3 3/4-12 | 4 | 4 3/4 | 1 | 3 3/8 | 15/16 | 6 5/16 | 3/8 | 3 19/32 | 12 1/8 |
| 7 | 3 | 2 1/4-12 | 2 3/4-12 | 3 1/2 | 3 3/4 | 1 | 2 5/8 | 7/8 | 5 7/16 | 17/32 | 3 15/32 | 13 3/4 |
| | 3 1/2 | 2 1/2-12 | 3 1/4-12 | 3 1/2 | 4 1/4 | 1 | 3 | 15/16 | 5 15/16 | 17/32 | 3 15/16 | 13 3/4 |
| | 4 | 3-12 | 3 3/4-12 | 4 | 4 3/4 | 1 | 3 3/8 | 15/16 | 6 5/16 | 3/8 | 3 15/16 | 13 3/4 |
| | 4 1/2 | 3 1/4-12 | 4 1/4-12 | 4 1/2 | 5 1/4 | 1 | 3 7/8 | 15/16 | 6 15/16 | 3/8 | 3 15/16 | 13 3/4 |
| | 5 | 3 1/2-12 | 4 3/4-12 | 5 | 5 3/4 | 1 | 4 1/4 | 15/16 | 7 7/16 | 3/8 | 3 15/16 | 13 3/4 |
| 8 | 3 1/2 | 2 1/2-12 | 3 1/4-12 | 3 1/2 | 4 1/4 | 1 | 3 | 15/16 | 5 15/16 | 17/32 | 4 1/16 | 15 |
| | 4 | 3-12 | 3 3/4-12 | 4 | 4 3/4 | 1 | 3 3/8 | 15/16 | 6 5/16 | 3/8 | 4 1/16 | 15 |
| | 4 1/2 | 3 1/4-12 | 4 1/4-12 | 4 1/2 | 5 1/4 | 1 | 3 7/8 | 15/16 | 6 15/16 | 3/8 | 4 1/16 | 15 |
| | 5 | 3 1/2-12 | 4 3/4-12 | 5 | 5 3/4 | 1 | 4 1/4 | 15/16 | 7 7/16 | 3/8 | 4 1/16 | 15 |
| | 5 1/2 | 4-12 | 5 1/4-12 | 5 1/2 | 6 1/4 | 1 | 4 5/8 | 15/16 | 7 15/16 | 3/8 | 4 1/16 | 15 |

## Standard Specifications

Nominal Pressure - 3000 PSI*
Bore Sizes - 10" through 20"
Rod Sizes - 4 1/2" through 10"
Mounting Styles - 9 Standard styles***
Strokes - Available in any practical stroke length
Cushions - Optional at either end or both ends

Standard - Externally removable bolted gland assembly
Standard Temperature - -10°F to +200°F**

* If pressure is from 3000 ~ 4000 PSI or higher, specify it during order
** If temperature is from 200 ~ 400°F or higher, specifiy it during order
*** Supplied drawings with all other mounting styles and specials

### Mounting Styles

Head Rectangular

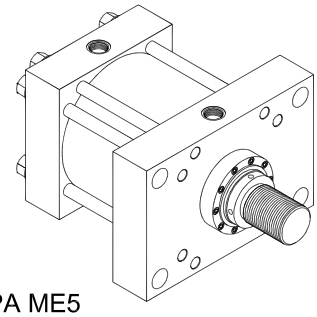

NFPA ME5 10"~14"

Head Square Flange

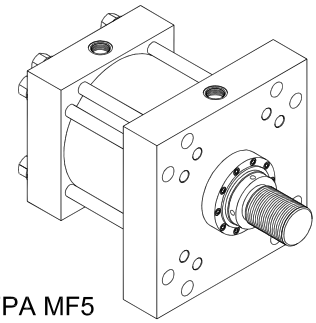

NFPA MF5 10"~20"

Cap Rectangular

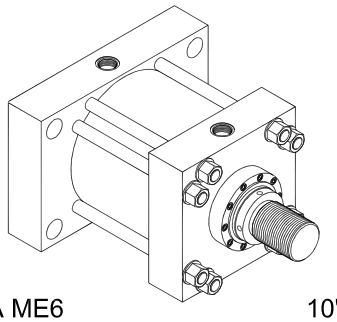

NFPA ME6 10"~14"

Cap Square Flange

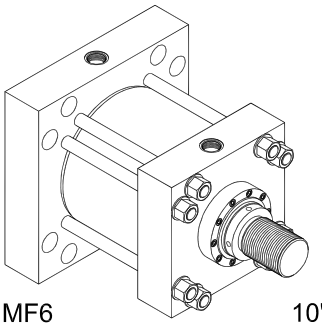

NFPA MF6 10"~20"

Side Lugs

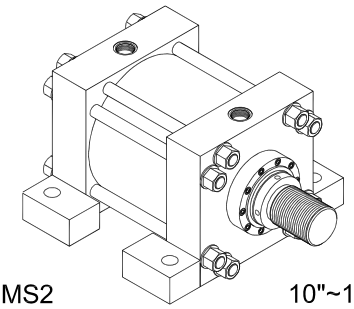

NFPA MS2 10"~14"

Cap Fixed Clevis

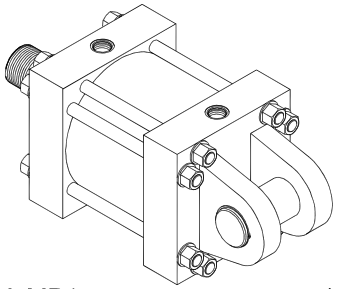

NFPA MP1 10"~20"

Head Trunnion

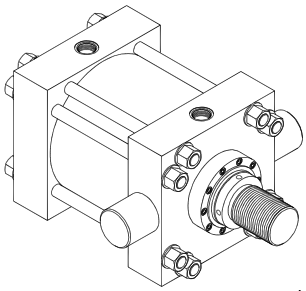

NFPA MT1 10"~14"

Cap Trunnion

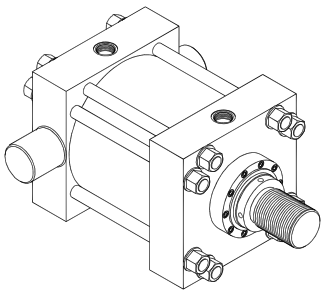

NFPA MT2 10"~14"

Intermediate Fixed Trunnion

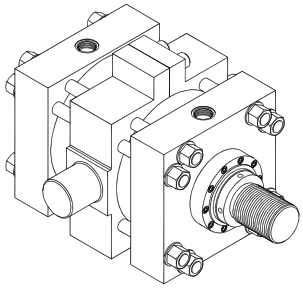

NFPA MT4 10"~14"

## NFPA ME5 - Head Rectangular

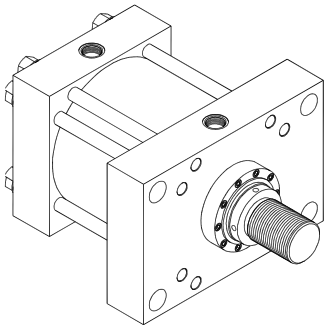

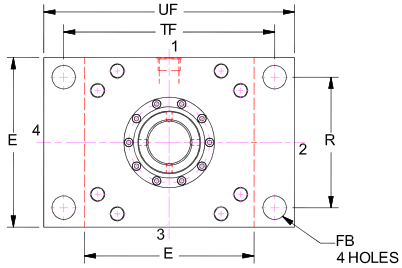


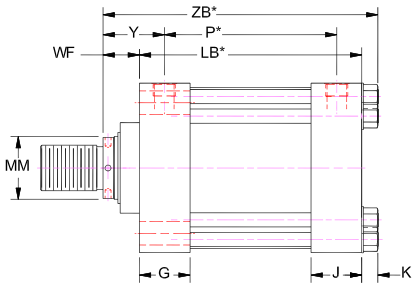


* Add stroke to starred dimension

### Body Dimensions

| BORE | E | EE (SAE) | EE (NPTF) | G | J | K | LB* | P* | FB | R | TF | UF |
|---|---|---|---|---|---|---|---|---|---|---|---|---|
| 10 | 12 5/8 | 24 | 2 | 3 11/16 | 3 11/16 | 1 9/32 | 12 1/8 | 8 1/2 | 1 13/16 | 9.62 | 15 7/8 | 19 |
| 12 | 14 7/8 | 24 | 2 1/2 | 4 7/16 | 4 7/16 | 1 13/32 | 14 1/2 | 10 1/8 | 2 1/16 | 11.45 | 18 1/2 | 22 |
| 14 | 17 1/8 | 24 | 2 1/2 | 4 7/8 | 4 7/8 | 1 13/32 | 15 5/8 | 10 7/8 | 2 5/16 | 13.26 | 21 | 25 |

### Rod End Dimensions

| BORE | MM | KK | A | B -.001/ -.005 | C | F | LAF | NA | RD | V | WF | Y | ZB* |
|---|---|---|---|---|---|---|---|---|---|---|---|---|---|
| 10 | 4 1/2 | 3 1/4-12 | 4 1/2 | 5.249 | 1 | 1 15/16 | 7 7/16 | 4 3/8 | 8 1/4 | 1/4 | 2 15/16 | 4 3/4 | 16 11/32 |
| | 5 | 3 1/2-12 | 5 | 5.749 | 1 | 1 15/16 | 8 3/16 | 4 7/8 | 8 7/8 | 1/4 | 3 3/16 | 5 | 16 19/32 |
| | 5 1/2 | 4-12 | 5 1/2 | 6.249 | 1 | 1 15/16 | 8 11/16 | 5 3/8 | 9 3/8 | 1/4 | 3 3/16 | 5 | 16 19/32 |
| | 7 | 5-12 | 7 | 7.999 | 1 | 1 15/16 | 10 1/2 | 6 7/8 | 10 1/2 | 3/8 | 3 1/2 | 5 5/16 | 16 29/32 |
| 12 | 5 1/2 | 4-12 | 5 1/2 | 6.249 | 1 | 1 15/16 | 8 11/16 | 5 3/8 | 9 3/8 | 1/4 | 3 3/16 | 5 3/8 | 19 3/32 |
| | 7 | 5-12 | 7 | 7.999 | 1 | 1 15/16 | 10 1/2 | 6 7/8 | 10 1/2 | 3/8 | 3 1/2 | 5 11/16 | 19 13/32 |
| | 8 | 5 3/4-12 | 8 | 8.999 | 1 | 1 15/16 | 12 | 7 7/8 | 12 1/2 | 3/8 | 4 | 6 3/16 | 19 29/32 |
| 14 | 7 | 5-12 | 7 | 7.999 | 1 | 1 15/16 | 10 1/2 | 6 7/8 | 10 1/2 | 3/8 | 3 1/2 | 5 7/8 | 20 17/32 |
| | 8 | 5 3/4-12 | 8 | 8.999 | 1 | 1 15/16 | 12 | 7 7/8 | 12 1/2 | 3/8 | 4 | 6 3/8 | 21 1/32 |
| | 10 | 7 1/4-12 | 10 | 10.999 | 1 | 1 15/16 | 14 1/2 | 9 7/8 | 14 1/2 | 3/8 | 4 1/2 | 6 7/8 | 21 17/32 |

### Tie Rod Dimensions

| BORE | RA | RB | RC | TIE ROD THREAD |
|---|---|---|---|---|
| 10 | 5.291 | 3.775 | — | 1 1/8-12 |
| 12 | 6.270 | 4.555 | — | 1 1/4-12 |
| 14 | 7.485 | 6.143 | 4.409 | 1 1/4-12 |

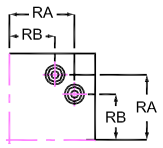


10" and 12" Bores

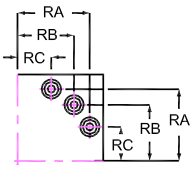


14" Bores

### Rod End Styles

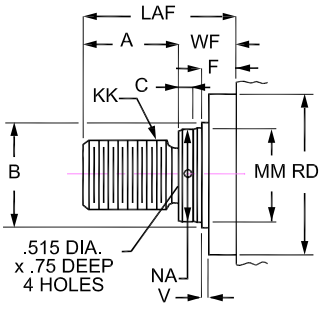


1
KK Male

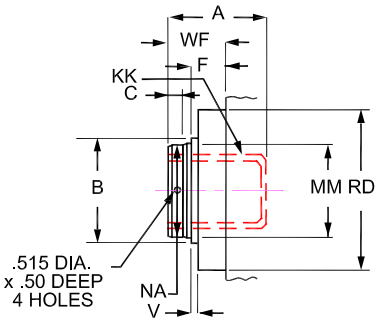


2
KK Female

## NFPA MF5 - Head Square Flange

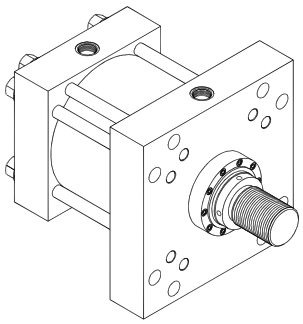

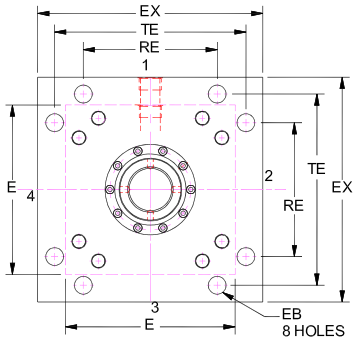


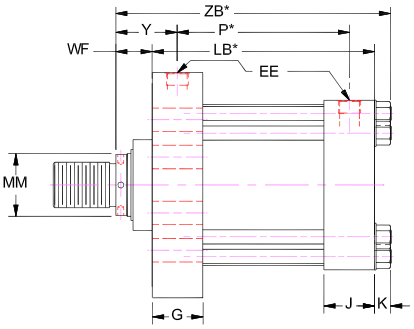


* Add stroke to starred dimension

### Body Dimensions

| BORE | E | EE (SAE) | EE (NPTF) | G | J | K | LB* | P* | EB | EX | RE | TE |
|---|---|---|---|---|---|---|---|---|---|---|---|---|
| 10 | 12 5/8 | 24 | 2 | 3 11/16 | 3 11/16 | 1 9/32 | 12 1/8 | 8 1/2 | 1 5/16 | 16 5/8 | 9.89 | 14.13 |
| 12 | 14 7/8 | 24 | 2 1/2 | 4 7/16 | 4 7/16 | 1 13/32 | 14 1/2 | 10 1/8 | 1 9/16 | 19 3/4 | 11.75 | 16.79 |
| 14 | 17 1/8 | 24 | 2 1/2 | 4 7/8 | 4 7/8 | 1 13/32 | 15 5/8 | 10 7/8 | 1 13/16 | 21 3/4 | 12.90 | 18.43 |
| 16 | 19 | 24 | - | 5 7/8 | 5 7/8 | 1 29/32 | 18 1/8 | 12 1/8 | 1 13/16 | 24 1/2 | 15.28 | 21.03 |
| 18 | 22 | 24 | - | 6 7/8 | 6 7/8 | 1 29/32 | 21 1/8 | 15 1/8 | 2 1/16 | 26 1/2 | 16.45 | 22.65 |
| 20 | 24 | 24 | - | 7 7/8 | 7 7/8 | 1 29/32 | 23 5/8 | 17 5/8 | 2 1/16 | 29 | 18.07 | 24.87 |

### Rod End Dimensions

| BORE | MM | KK | A | B -.001/ -.005 | C | F | LAF | NA | RD | V | WF | Y | ZB* |
|---|---|---|---|---|---|---|---|---|---|---|---|---|---|
| 10 | 4 1/2 | 3 1/4-12 | 4 1/2 | 5.249 | 1 | 1 15/16 | 7 7/16 | 4 3/8 | 8 1/4 | 1/4 | 2 15/16 | 4 3/4 | 16 11/32 |
| | 5 | 3 1/2-12 | 5 | 5.749 | 1 | 1 15/16 | 8 3/16 | 4 7/8 | 8 7/8 | 1/4 | 3 3/16 | 5 | 16 19/32 |
| | 5 1/2 | 4-12 | 5 1/2 | 6.249 | 1 | 1 15/16 | 8 11/16 | 5 3/8 | 9 3/8 | 1/4 | 3 3/16 | 5 | 16 19/32 |
| | 7 | 5-12 | 7 | 7.999 | 1 | 1 15/16 | 10 1/2 | 6 7/8 | 10 1/2 | 3/8 | 3 1/2 | 5 5/16 | 16 29/32 |
| 12 | 5 1/2 | 4-12 | 5 1/2 | 6.249 | 1 | 1 15/16 | 8 11/16 | 5 3/8 | 9 3/8 | 1/4 | 3 3/16 | 5 3/8 | 19 3/32 |
| | 7 | 5-12 | 7 | 7.999 | 1 | 1 15/16 | 10 1/2 | 6 7/8 | 10 1/2 | 3/8 | 3 1/2 | 5 11/16 | 19 13/32 |
| | 8 | 5 3/4-12 | 8 | 8.999 | 1 | 1 15/16 | 12 | 7 7/8 | 12 1/2 | 3/8 | 4 | 6 3/16 | 19 29/32 |
| 14 | 7 | 5-12 | 7 | 7.999 | 1 | 1 15/16 | 10 1/2 | 6 7/8 | 10 1/2 | 3/8 | 3 1/2 | 5 7/8 | 20 17/32 |
| | 8 | 5 3/4-12 | 8 | 8.999 | 1 | 1 15/16 | 12 | 7 7/8 | 12 1/2 | 3/8 | 4 | 6 3/8 | 21 1/32 |
| | 10 | 7 1/4-12 | 10 | 10.999 | 1 | 1 15/16 | 14 1/2 | 9 7/8 | 14 1/2 | 3/8 | 4 1/2 | 6 7/8 | 21 17/32 |
| 16 | 8 | 5 3/4-12 | 8 | 8.999 | 1 | 1 15/16 | 12 | 7 7/8 | 12 1/2 | 3/8 | 4 | 7 | 24 1/32 |
| | 9 | 6 1/2-12 | 9 | 9.999 | 1 | 1 15/16 | 13 1/4 | 8 7/8 | 13 1/2 | 3/8 | 4 1/4 | 7 1/4 | 24 9/32 |
| | 10 | 7 1/4-12 | 10 | 10.999 | 1 | 1 15/16 | 14 1/2 | 9 7/8 | 14 1/2 | 3/8 | 4 1/2 | 7 1/2 | 24 17/32 |
| 18 | 9 | 6 1/2-12 | 9 | 9.999 | 1 | 1 15/16 | 13 1/4 | 8 7/8 | 13 1/2 | 3/8 | 4 1/4 | 7 1/4 | 27 9/32 |
| | 10 | 7 1/4-12 | 10 | 10.999 | 1 | 1 15/16 | 14 1/2 | 9 7/8 | 14 1/2 | 3/8 | 4 1/2 | 7 1/2 | 27 17/32 |
| 20 | 10 | 7 1/4-12 | 10 | 10.999 | 1 | 1 15/16 | 14 1/2 | 9 7/8 | 14 1/2 | 3/8 | 4 1/2 | 7 1/2 | 30 1/32 |

### Tie Rod Dimensions

| BORE | RA | RB | RC | TIE ROD THREAD |
|---|---|---|---|---|
| 10 | 5.291 | 3.775 | — | 1 1/8-12 |
| 12 | 6.270 | 4.555 | — | 1 1/4-12 |
| 14 | 7.485 | 6.143 | 4.409 | 1 1/4-12 |
| 16 | 8.086 | 6.093 | - | 1 1/2-12 |
| 18 | 9.589 | 7.910 | 5.761 | 1 1/2-12 |
| 20 | 10.437 | 8.750 | 6.649 | 1 1/2-12 |

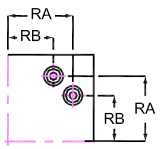


10", 12" and 16" Bores

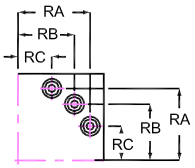


14", 18" and 20" Bores

### Rod End Styles

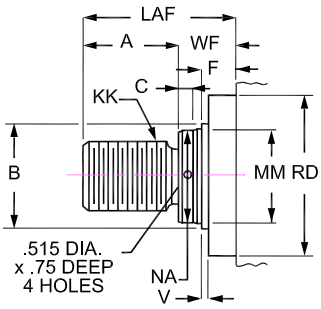


1
KK Male

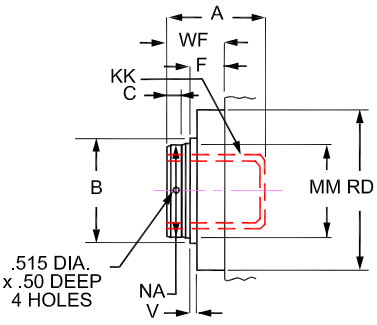


2
KK Female

## NFPA ME6 - Cap Rectangular

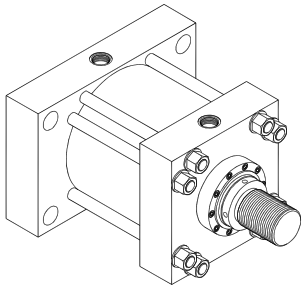

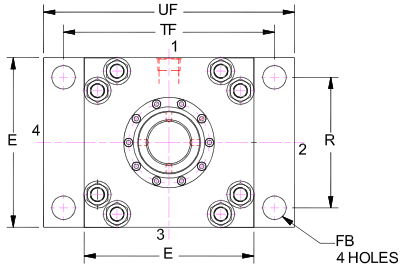


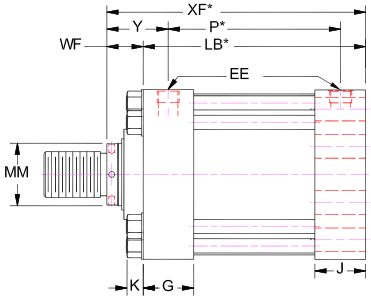


* Add stroke to starred dimension

### Body Dimensions

| BORE | E | EE (SAE) | EE (NPTF) | G | J | K | LB* | P* | FB | R | TF | UF |
|---|---|---|---|---|---|---|---|---|---|---|---|---|
| 10 | 12 5/8 | 24 | 2 | 3 11/16 | 3 11/16 | 1 9/32 | 12 1/8 | 8 1/2 | 1 13/16 | 9.62 | 15 7/8 | 19 |
| 12 | 14 7/8 | 24 | 2 1/2 | 4 7/16 | 4 7/16 | 1 13/32 | 14 1/2 | 10 1/8 | 2 1/16 | 11.45 | 18 1/2 | 22 |
| 14 | 17 1/8 | 24 | 2 1/2 | 4 7/8 | 4 7/8 | 1 13/32 | 15 5/8 | 10 7/8 | 2 5/16 | 13.26 | 21 | 25 |

### Rod End Dimensions

| BORE | MM | KK | A | B -.001/ -.005 | C | F | LAF | NA | RD | V | WF | Y | XF* |
|---|---|---|---|---|---|---|---|---|---|---|---|---|---|
| 10 | 4 1/2 | 3 1/4-12 | 4 1/2 | 5.249 | 1 | 1 15/16 | 7 7/16 | 4 3/8 | 8 1/4 | 1/4 | 2 15/16 | 4 3/4 | 15 1/16 |
| | 5 | 3 1/2-12 | 5 | 5.749 | 1 | 1 15/16 | 8 3/16 | 4 7/8 | 8 7/8 | 1/4 | 3 3/16 | 5 | 15 5/16 |
| | 5 1/2 | 4-12 | 5 1/2 | 6.249 | 1 | 1 15/16 | 8 11/16 | 5 3/8 | 9 3/8 | 1/4 | 3 3/16 | 5 | 15 5/16 |
| | 7 | 5-12 | 7 | 7.999 | 1 | 1 15/16 | 10 1/2 | 6 7/8 | 10 1/2 | 3/8 | 3 1/2 | 5 5/16 | 15 5/8 |
| 12 | 5 1/2 | 4-12 | 5 1/2 | 6.249 | 1 | 1 15/16 | 8 11/16 | 5 3/8 | 9 3/8 | 1/4 | 3 3/16 | 5 3/8 | 17 11/16 |
| | 7 | 5-12 | 7 | 7.999 | 1 | 1 15/16 | 10 1/2 | 6 7/8 | 10 1/2 | 3/8 | 3 1/2 | 5 11/16 | 18 |
| | 8 | 5 3/4-12 | 8 | 8.999 | 1 | 1 15/16 | 12 | 7 7/8 | 12 1/2 | 3/8 | 4 | 6 3/16 | 18 1/2 |
| 14 | 7 | 5-12 | 7 | 7.999 | 1 | 1 15/16 | 10 1/2 | 6 7/8 | 10 1/2 | 3/8 | 3 1/2 | 5 7/8 | 19 1/8 |
| | 8 | 5 3/4-12 | 8 | 8.999 | 1 | 1 15/16 | 12 | 7 7/8 | 12 1/2 | 3/8 | 4 | 6 3/8 | 19 5/8 |
| | 10 | 7 1/4-12 | 10 | 10.999 | 1 | 1 15/16 | 14 1/2 | 9 7/8 | 14 1/2 | 3/8 | 4 1/2 | 6 7/8 | 20 1/8 |

### Tie Rod Dimensions

| BORE | RA | RB | RC | TIE ROD THREAD |
|---|---|---|---|---|
| 10 | 5.291 | 3.775 | — | 1 1/8-12 |
| 12 | 6.270 | 4.555 | — | 1 1/4-12 |
| 14 | 7.485 | 6.143 | 4.409 | 1 1/4-12 |

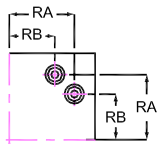


10" and 12" Bores

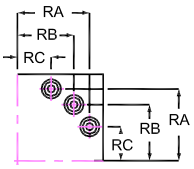


14" Bores

### Rod End Styles

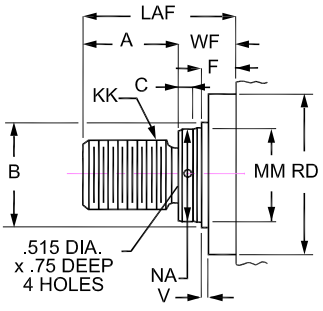


1
KK Male

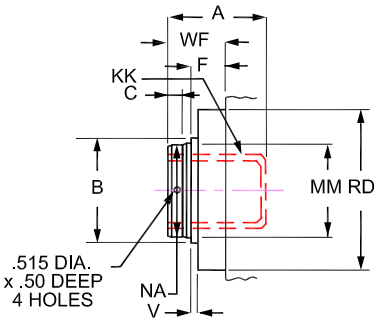


2
KK Female

## NFPA MF6 - Cap Square Flange

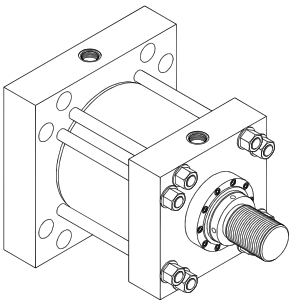

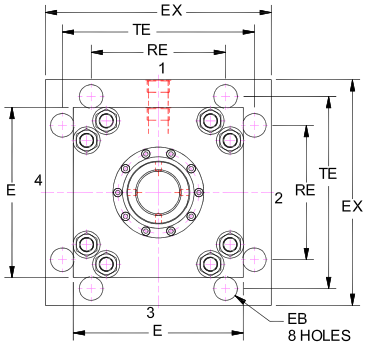


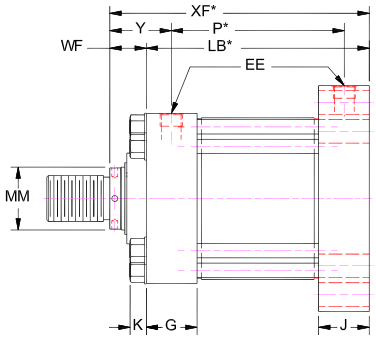


* Add stroke to starred dimension

### Body Dimensions

| BORE | E | EE (SAE) | EE (NPTF) | G | J | K | LB* | P* | EB | EX | RE | TE |
|---|---|---|---|---|---|---|---|---|---|---|---|---|
| 10 | 12 5/8 | 24 | 2 | 3 11/16 | 3 11/16 | 1 9/32 | 12 1/8 | 8 1/2 | 1 5/16 | 16 5/8 | 9.89 | 14.13 |
| 12 | 14 7/8 | 24 | 2 1/2 | 4 7/16 | 4 7/16 | 1 13/32 | 14 1/2 | 10 1/8 | 1 9/16 | 19 3/4 | 11.75 | 16.79 |
| 14 | 17 1/8 | 24 | 2 1/2 | 4 7/8 | 4 7/8 | 1 13/32 | 15 5/8 | 10 7/8 | 1 13/16 | 21 3/4 | 12.90 | 18.43 |
| 16 | 19 | 24 | - | 5 7/8 | 5 7/8 | 1 29/32 | 18 1/8 | 12 1/8 | 1 13/16 | 24 1/2 | 15.28 | 21.03 |
| 18 | 22 | 24 | - | 6 7/8 | 6 7/8 | 1 29/32 | 21 1/8 | 15 1/8 | 2 1/16 | 26 1/2 | 16.45 | 22.65 |
| 20 | 24 | 24 | - | 7 7/8 | 7 7/8 | 1 29/32 | 23 5/8 | 17 5/8 | 2 1/16 | 29 | 18.07 | 24.87 |

### Rod End Dimensions

| BORE | MM | KK | A | B -.001/ -.005 | C | F | LAF | NA | RD | V | WF | Y | XF* |
|---|---|---|---|---|---|---|---|---|---|---|---|---|---|
| 10 | 4 1/2 | 3 1/4-12 | 4 1/2 | 5.249 | 1 | 1 15/16 | 7 7/16 | 4 3/8 | 8 1/4 | 1/4 | 2 15/16 | 4 3/4 | 15 1/16 |
| | 5 | 3 1/2-12 | 5 | 5.749 | 1 | 1 15/16 | 8 3/16 | 4 7/8 | 8 7/8 | 1/4 | 3 3/16 | 5 | 15 5/16 |
| | 5 1/2 | 4-12 | 5 1/2 | 6.249 | 1 | 1 15/16 | 8 11/16 | 5 3/8 | 9 3/8 | 1/4 | 3 3/16 | 5 | 15 5/16 |
| | 7 | 5-12 | 7 | 7.999 | 1 | 1 15/16 | 10 1/2 | 6 7/8 | 10 1/2 | 3/8 | 3 1/2 | 5 5/16 | 15 5/8 |
| 12 | 5 1/2 | 4-12 | 5 1/2 | 6.249 | 1 | 1 15/16 | 8 11/16 | 5 3/8 | 9 3/8 | 1/4 | 3 3/16 | 5 3/8 | 17 11/16 |
| | 7 | 5-12 | 7 | 7.999 | 1 | 1 15/16 | 10 1/2 | 6 7/8 | 10 1/2 | 3/8 | 3 1/2 | 5 11/16 | 18 |
| | 8 | 5 3/4-12 | 8 | 8.999 | 1 | 1 15/16 | 12 | 7 7/8 | 12 1/2 | 3/8 | 4 | 6 3/16 | 18 1/2 |
| 14 | 7 | 5-12 | 7 | 7.999 | 1 | 1 15/16 | 10 1/2 | 6 7/8 | 10 1/2 | 3/8 | 3 1/2 | 5 7/8 | 19 1/8 |
| | 8 | 5 3/4-12 | 8 | 8.999 | 1 | 1 15/16 | 12 | 7 7/8 | 12 1/2 | 3/8 | 4 | 6 3/8 | 19 5/8 |
| | 10 | 7 1/4-12 | 10 | 10.999 | 1 | 1 15/16 | 14 1/2 | 9 7/8 | 14 1/2 | 3/8 | 4 1/2 | 6 7/8 | 20 1/8 |
| 16 | 8 | 5 3/4-12 | 8 | 8.999 | 1 | 1 15/16 | 12 | 7 7/8 | 12 1/2 | 3/8 | 4 | 7 | 22 1/8 |
| | 9 | 6 1/2-12 | 9 | 9.999 | 1 | 1 15/16 | 13 1/4 | 8 7/8 | 13 1/2 | 3/8 | 4 1/4 | 7 1/4 | 22 3/8 |
| | 10 | 7 1/4-12 | 10 | 10.999 | 1 | 1 15/16 | 14 1/2 | 9 7/8 | 14 1/2 | 3/8 | 4 1/2 | 7 1/2 | 22 5/8 |
| 18 | 9 | 6 1/2-12 | 9 | 9.999 | 1 | 1 15/16 | 13 1/4 | 8 7/8 | 13 1/2 | 3/8 | 4 1/4 | 7 1/4 | 25 3/8 |
| | 10 | 7 1/4-12 | 10 | 10.999 | 1 | 1 15/16 | 14 1/2 | 9 7/8 | 14 1/2 | 3/8 | 4 1/2 | 7 1/2 | 25 5/8 |
| 20 | 10 | 7 1/4-12 | 10 | 10.999 | 1 | 1 15/16 | 14 1/2 | 9 7/8 | 14 1/2 | 3/8 | 4 1/2 | 7 1/2 | 28 1/8 |

### Tie Rod Dimensions

| BORE | RA | RB | RC | TIE ROD THREAD |
|---|---|---|---|---|
| 10 | 5.291 | 3.775 | — | 1 1/8-12 |
| 12 | 6.270 | 4.555 | — | 1 1/4-12 |
| 14 | 7.485 | 6.143 | 4.409 | 1 1/4-12 |
| 16 | 8.086 | 6.093 | - | 1 1/2-12 |
| 18 | 9.589 | 7.910 | 5.761 | 1 1/2-12 |
| 20 | 10.437 | 8.750 | 6.649 | 1 1/2-12 |

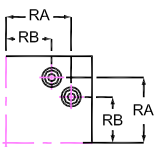


10", 12" and 16" Bores

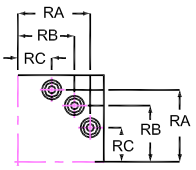


14", 18" and 20" Bores

### Rod End Styles

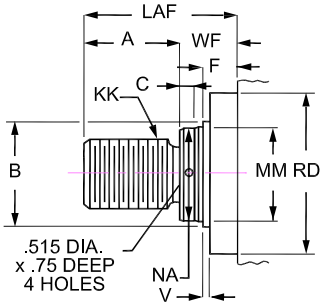


1
KK Male

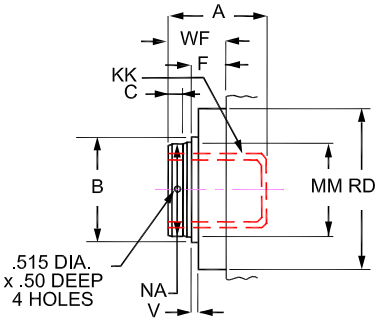


2
KK Female

## NFPA MS2 - Side Lugs

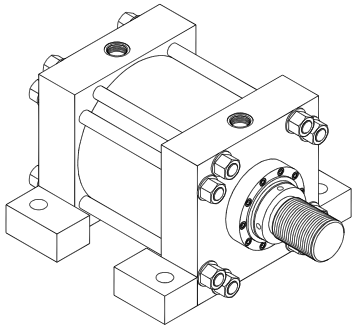

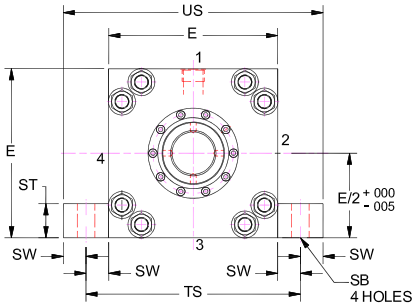


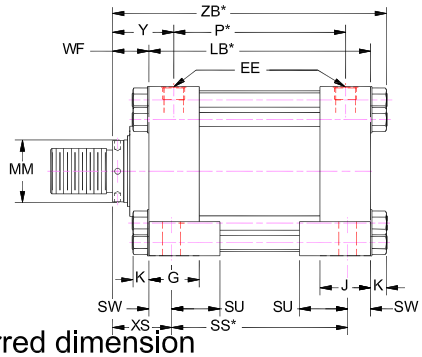


* Add stroke to starred dimension

## Body Dimensions

| BORE | E | EE (SAE) | EE (NPTF) | G | J | K | LB* | P* | SB | SS* | ST | SU | SW | TS | US |
|---|---|---|---|---|---|---|---|---|---|---|---|---|---|---|---|
| 10 | 12 5/8 | 24 | 2 | 3 11/16 | 3 11/16 | 1 9/32 | 12 1/8 | 8 1/2 | 1 9/16 | 8 7/8 | 2 1/4 | 3 1/2 | 1 5/8 | 15 7/8 | 19 1/8 |
| 12 | 14 7/8 | 24 | 2 1/2 | 4 7/16 | 4 7/16 | 1 13/32 | 14 1/2 | 10 1/8 | 1 9/16 | 10 1/2 | 3 | 4 1/4 | 2 | 18 7/8 | 22 7/8 |
| 14 | 17 1/8 | 24 | 2 1/2 | 4 7/8 | 4 7/8 | 1 13/32 | 15 5/8 | 10 7/8 | 2 5/16 | 11 1/8 | 4 | 4 3/4 | 2 1/4 | 21 5/8 | 26 1/8 |

## Rod End Dimensions

| BORE | MM | KK | A | B -.001/ -.005 | C | F | LAF | NA | RD | V | WF | Y | XS | ZB* |
|---|---|---|---|---|---|---|---|---|---|---|---|---|---|---|
| 10 | 4 1/2 | 3 1/4-12 | 4 1/2 | 5.249 | 1 | 1 15/16 | 7 7/16 | 4 3/8 | 8 1/4 | 1/4 | 2 15/16 | 4 3/4 | 4 9/16 | 16 11/32 |
| | 5 | 3 1/2-12 | 5 | 5.749 | 1 | 1 15/16 | 8 3/16 | 4 7/8 | 8 7/8 | 1/4 | 3 3/16 | 5 | 4 13/16 | 16 19/32 |
| | 5 1/2 | 4-12 | 5 1/2 | 6.249 | 1 | 1 15/16 | 8 11/16 | 5 3/8 | 9 3/8 | 1/4 | 3 3/16 | 5 | 4 13/16 | 16 19/32 |
| | 7 | 5-12 | 7 | 7.999 | 1 | 1 15/16 | 10 1/2 | 6 7/8 | 10 1/2 | 3/8 | 3 1/2 | 5 5/16 | 5 1/8 | 16 29/32 |
| 12 | 5 1/2 | 4-12 | 5 1/2 | 6.249 | 1 | 1 15/16 | 8 11/16 | 5 3/8 | 9 3/8 | 1/4 | 3 3/16 | 5 3/8 | 5 3/16 | 19 3/32 |
| | 7 | 5-12 | 7 | 7.999 | 1 | 1 15/16 | 10 1/2 | 6 7/8 | 10 1/2 | 3/8 | 3 1/2 | 5 11/16 | 5 1/2 | 19 13/32 |
| | 8 | 5 3/4-12 | 8 | 8.999 | 1 | 1 15/16 | 12 | 7 7/8 | 12 1/2 | 3/8 | 4 | 6 3/16 | 6 | 19 29/32 |
| 14 | 7 | 5-12 | 7 | 7.999 | 1 | 1 15/16 | 10 1/2 | 6 7/8 | 10 1/2 | 3/8 | 3 1/2 | 5 7/8 | 5 3/4 | 20 17/32 |
| | 8 | 5 3/4-12 | 8 | 8.999 | 1 | 1 15/16 | 12 | 7 7/8 | 12 1/2 | 3/8 | 4 | 6 3/8 | 6 1/4 | 21 1/32 |
| | 10 | 7 1/4-12 | 10 | 10.999 | 1 | 1 15/16 | 14 1/2 | 9 7/8 | 14 1/2 | 3/8 | 4 1/2 | 6 7/8 | 6 3/4 | 21 17/32 |

## Tie Rod Dimensions

| BORE | RA | RB | RC | TIE ROD THREAD |
|---|---|---|---|---|
| 10 | 5.291 | 3.775 | — | 1 1/8-12 |
| 12 | 6.270 | 4.555 | — | 1 1/4-12 |
| 14 | 7.485 | 6.143 | 4.409 | 1 1/4-12 |

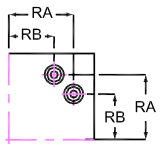


10" and 12" Bores

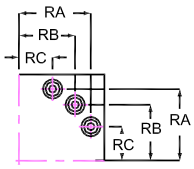


14" Bores

## Rod End Styles

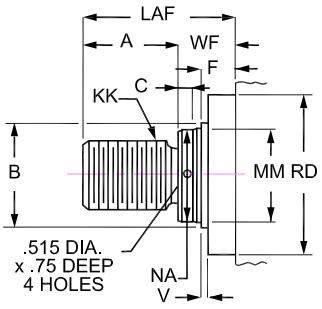


1
KK Male

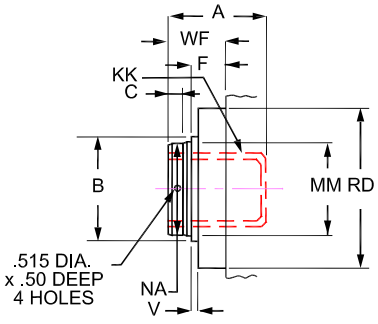


2
KK Female

## NFPA MP1 - Cap Fixed Clevis

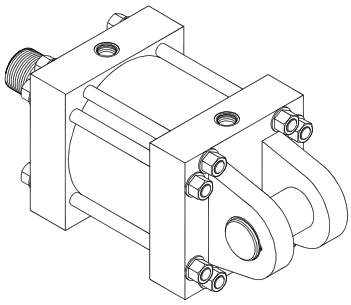

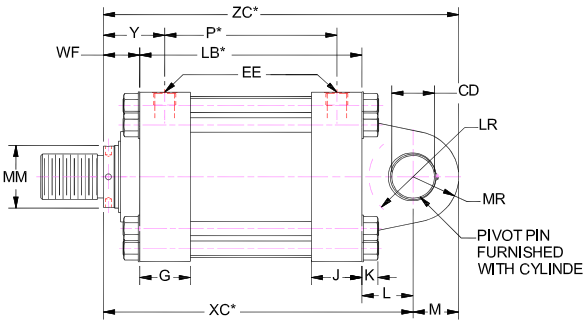


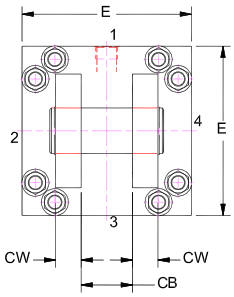


* Add stroke to starred dimension

## Body Dimensions

| BORE | E | EE (SAE) | EE (NPTF) | G | J | K | LB* | P* | CB | CD +.001/ -.003 | CW | L | LR | M | MR |
|---|---|---|---|---|---|---|---|---|---|---|---|---|---|---|---|
| 10 | 12 5/8 | 24 | 2 | 3 11/16 | 3 11/16 | 1 9/32 | 12 1/8 | 8 1/2 | 4 | 3.500 | 2 | 4 | 3 3/8 | 3 1/2 | 3 1/2 |
| 12 | 14 7/8 | 24 | 2 1/2 | 4 7/16 | 4 7/16 | 1 13/32 | 14 1/2 | 10 1/8 | 4 1/2 | 4.000 | 2 1/4 | 4 1/2 | 3 7/8 | 4 | 4 |
| 14 | 17 1/8 | 24 | 2 1/2 | 4 7/8 | 4 7/8 | 1 13/32 | 15 5/8 | 10 7/8 | 6 | 5.000 | 3 | 5 3/4 | 4 3/16 | 5 | 5 |
| 16 | 19 | 24 | - | 5 7/8 | 5 7/8 | 1 29/32 | 18 1/8 | 12 1/8 | 7 | 6.000 | 3 1/2 | 7 | 6 1/4 | 6 | 6 |
| 18 | 22 | 24 | - | 6 7/8 | 6 7/8 | 1 29/32 | 21 1/8 | 15 1/8 | 8 | 6.500 | 4 | 7 5/8 | 6 3/4 | 6 1/2 | 6 1/2 |
| 20 | 24 | 24 | - | 7 7/8 | 7 7/8 | 1 29/32 | 23 5/8 | 17 5/8 | 9 | 7.500 | 4 1/2 | 8 3/4 | 7 3/4 | 7 1/2 | 7 1/2 |

## Rod End Dimensions

| BORE | MM | KK | A | B -.001/ -.005 | C | F | LAF | NA | RD | V | WF | Y | XC* | ZC* |
|---|---|---|---|---|---|---|---|---|---|---|---|---|---|---|
| 10 | 4 1/2 | 3 1/4-12 | 4 1/2 | 5.249 | 1 | 1 15/16 | 7 7/16 | 4 3/8 | 8 1/4 | 1/4 | 2 15/16 | 4 3/4 | 19 1/16 | 22 9/16 |
| | 5 | 3 1/2-12 | 5 | 5.749 | 1 | 1 15/16 | 8 3/16 | 4 7/8 | 8 7/8 | 1/4 | 3 3/16 | 5 | 19 5/16 | 22 13/16 |
| | 5 1/2 | 4-12 | 5 1/2 | 6.249 | 1 | 1 15/16 | 8 11/16 | 5 3/8 | 9 3/8 | 1/4 | 3 3/16 | 5 | 19 5/16 | 22 13/16 |
| | 7 | 5-12 | 7 | 7.999 | 1 | 1 15/16 | 10 1/2 | 6 7/8 | 10 1/2 | 3/8 | 3 1/2 | 5 5/16 | 19 5/8 | 23 1/8 |
| 12 | 5 1/2 | 4-12 | 5 1/2 | 6.249 | 1 | 1 15/16 | 8 11/16 | 5 3/8 | 9 3/8 | 1/4 | 3 3/16 | 5 3/8 | 22 3/16 | 26 3/16 |
| | 7 | 5-12 | 7 | 7.999 | 1 | 1 15/16 | 10 1/2 | 6 7/8 | 10 1/2 | 3/8 | 3 1/2 | 5 11/16 | 22 1/2 | 26 1/2 |
| | 8 | 5 3/4-12 | 8 | 8.999 | 1 | 1 15/16 | 12 | 7 7/8 | 12 1/2 | 3/8 | 4 | 6 3/16 | 23 | 27 |
| 14 | 7 | 5-12 | 7 | 7.999 | 1 | 1 15/16 | 10 1/2 | 6 7/8 | 10 1/2 | 3/8 | 3 1/2 | 5 7/8 | 24 7/8 | 29 7/8 |
| | 8 | 5 3/4-12 | 8 | 8.999 | 1 | 1 15/16 | 12 | 7 7/8 | 12 1/2 | 3/8 | 4 | 6 3/8 | 25 3/8 | 30 3/8 |
| | 10 | 7 1/4-12 | 10 | 10.999 | 1 | 1 15/16 | 14 1/2 | 9 7/8 | 14 1/2 | 3/8 | 4 1/2 | 6 7/8 | 25 7/8 | 30 7/8 |
| 16 | 8 | 5 3/4-12 | 8 | 8.999 | 1 | 1 15/16 | 12 | 7 7/8 | 12 1/2 | 3/8 | 4 | 7 | 29 1/8 | 35 1/8 |
| | 9 | 6 1/2-12 | 9 | 9.999 | 1 | 1 15/16 | 13 1/4 | 8 7/8 | 13 1/2 | 3/8 | 4 1/4 | 7 1/4 | 29 3/8 | 35 3/8 |
| | 10 | 7 1/4-12 | 10 | 10.999 | 1 | 1 15/16 | 14 1/2 | 9 7/8 | 14 1/2 | 3/8 | 4 1/2 | 7 1/2 | 29 5/8 | 35 5/8 |
| 18 | 9 | 6 1/2-12 | 9 | 9.999 | 1 | 1 15/16 | 13 1/4 | 8 7/8 | 13 1/2 | 3/8 | 4 1/4 | 7 1/4 | 33 | 39 1/2 |
| | 10 | 7 1/4-12 | 10 | 10.999 | 1 | 1 15/16 | 14 1/2 | 9 7/8 | 14 1/2 | 3/8 | 4 1/2 | 7 1/2 | 33 1/4 | 39 3/4 |
| 20 | 10 | 7 1/4-12 | 10 | 10.999 | 1 | 1 15/16 | 14 1/2 | 9 7/8 | 14 1/2 | 3/8 | 4 1/2 | 7 1/2 | 36 7/8 | 44 3/8 |

## Tie Rod Dimensions

| BORE | RA | RB | RC | TIE ROD THREAD |
|---|---|---|---|---|
| 10 | 5.291 | 3.775 | — | 1 1/8-12 |
| 12 | 6.270 | 4.555 | — | 1 1/4-12 |
| 14 | 7.485 | 6.143 | 4.409 | 1 1/4-12 |
| 16 | 8.086 | 6.093 | - | 1 1/2-12 |
| 18 | 9.589 | 7.910 | 5.761 | 1 1/2-12 |
| 20 | 10.437 | 8.750 | 6.649 | 1 1/2-12 |

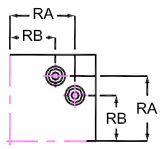


10", 12" and 16" Bores

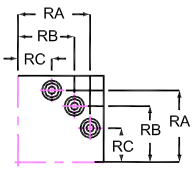


14", 18" and 20" Bores

## Rod End Styles

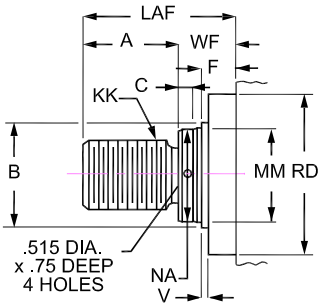


1
KK Male

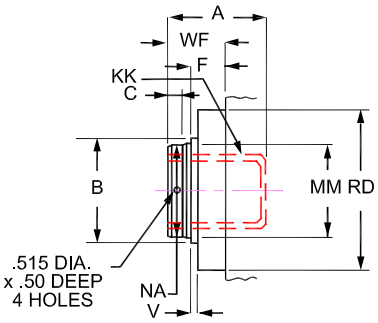


2
KK Female

## NFPA MT1 - Head Trunnion

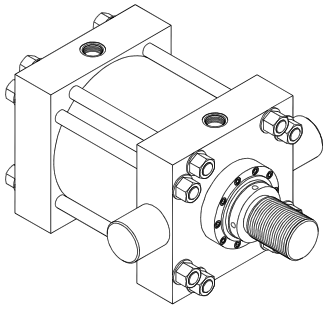

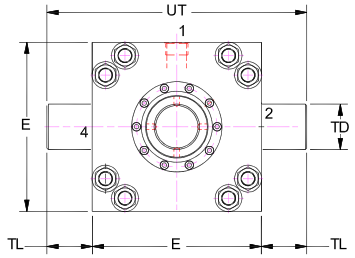


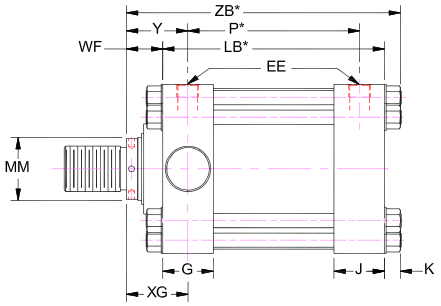


* Add stroke to starred dimension

## Body Dimensions

| BORE | E | EE (SAE) | EE (NPTF) | G | J | K | LB* | P* | MAX PRESSURE PSI | TD -.000/ -.001 | TL | UT |
|---|---|---|---|---|---|---|---|---|---|---|---|---|
| 10 | 12 5/8 | 24 | 2 | 3 11/16 | 3 11/16 | 1 9/32 | 12 1/8 | 8 1/2 | 1600 | 3.500 | 3 1/2 | 19 5/8 |
| 12 | 14 7/8 | 24 | 2 1/2 | 4 7/16 | 4 7/16 | 1 13/32 | 14 1/2 | 10 1/8 | 1500 | 4.000 | 4 | 22 7/8 |
| 14 | 17 1/8 | 24 | 2 1/2 | 4 7/8 | 4 7/8 | 1 13/32 | 15 5/8 | 10 7/8 | 1400 | 4.500 | 4 1/2 | 26 1/8 |

## Rod End Dimensions

| BORE | MM | KK | A | B -.001/ -.005 | C | F | LAF | NA | RD | V | WF | Y | XG | ZB* |
|---|---|---|---|---|---|---|---|---|---|---|---|---|---|---|
| 10 | 4 1/2 | 3 1/4-12 | 4 1/2 | 5.249 | 1 | 1 15/16 | 7 7/16 | 4 3/8 | 8 1/4 | 1/4 | 2 15/16 | 4 3/4 | 4 3/4 | 16 11/32 |
| | 5 | 3 1/2-12 | 5 | 5.749 | 1 | 1 15/16 | 8 3/16 | 4 7/8 | 8 7/8 | 1/4 | 3 3/16 | 5 | 5 | 16 19/32 |
| | 5 1/2 | 4-12 | 5 1/2 | 6.249 | 1 | 1 15/16 | 8 11/16 | 5 3/8 | 9 3/8 | 1/4 | 3 3/16 | 5 | 5 | 16 19/32 |
| | 7 | 5-12 | 7 | 7.999 | 1 | 1 15/16 | 10 1/2 | 6 7/8 | 10 1/2 | 3/8 | 3 1/2 | 5 5/16 | 5 5/16 | 16 29/32 |
| 12 | 5 1/2 | 4-12 | 5 1/2 | 6.249 | 1 | 1 15/16 | 8 11/16 | 5 3/8 | 9 3/8 | 1/4 | 3 3/16 | 5 3/8 | 5 3/8 | 19 3/32 |
| | 7 | 5-12 | 7 | 7.999 | 1 | 1 15/16 | 10 1/2 | 6 7/8 | 10 1/2 | 3/8 | 3 1/2 | 5 11/16 | 5 11/16 | 19 13/32 |
| | 8 | 5 3/4-12 | 8 | 8.999 | 1 | 1 15/16 | 12 | 7 7/8 | 12 1/2 | 3/8 | 4 | 6 3/16 | 6 3/16 | 19 29/32 |
| 14 | 7 | 5-12 | 7 | 7.999 | 1 | 1 15/16 | 10 1/2 | 6 7/8 | 10 1/2 | 3/8 | 3 1/2 | 5 7/8 | 5 15/16 | 20 17/32 |
| | 8 | 5 3/4-12 | 8 | 8.999 | 1 | 1 15/16 | 12 | 7 7/8 | 12 1/2 | 3/8 | 4 | 6 3/8 | 6 7/16 | 21 1/32 |
| | 10 | 7 1/4-12 | 10 | 10.999 | 1 | 1 15/16 | 14 1/2 | 9 7/8 | 14 1/2 | 3/8 | 4 1/2 | 6 7/8 | 6 15/16 | 21 17/32 |

## Tie Rod Dimensions

| BORE | RA | RB | RC | TIE ROD THREAD |
|---|---|---|---|---|
| 10 | 5.291 | 3.775 | — | 1 1/8-12 |
| 12 | 6.270 | 4.555 | — | 1 1/4-12 |
| 14 | 7.485 | 6.143 | 4.409 | 1 1/4-12 |

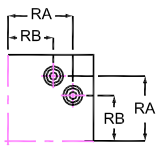


10" and 12" Bores

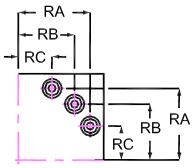


14" Bores

## Rod End Styles

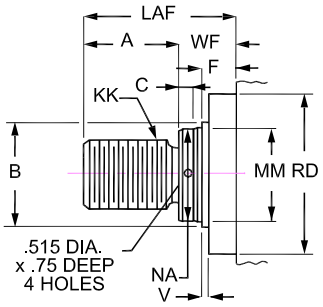


1
KK Male

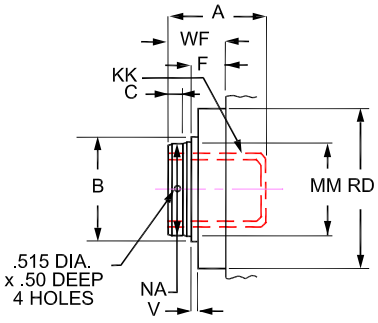


2
KK Female

## NFPA MT2 - Cap Trunnion

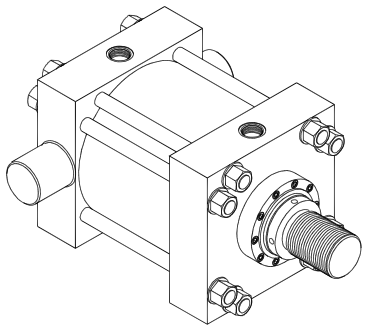

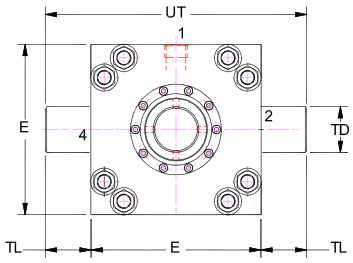


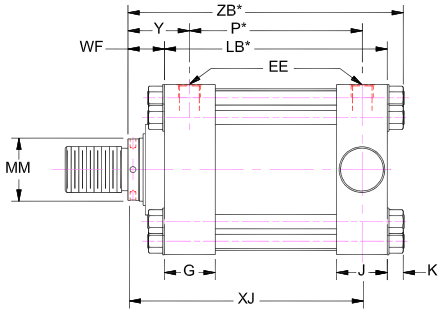


* Add stroke to starred dimension

## Body Dimensions

| BORE | E | EE (SAE) | EE (NPTF) | G | J | K | LB* | P* | MAX PRESSURE PSI | TD -.000/ -.001 | TL | UT |
|---|---|---|---|---|---|---|---|---|---|---|---|---|
| 10 | 12 5/8 | 24 | 2 | 3 11/16 | 3 11/16 | 1 9/32 | 12 1/8 | 8 1/2 | 1600 | 3.500 | 3 1/2 | 19 5/8 |
| 12 | 14 7/8 | 24 | 2 1/2 | 4 7/16 | 4 7/16 | 1 13/32 | 14 1/2 | 10 1/8 | 1500 | 4.000 | 4 | 22 7/8 |
| 14 | 17 1/8 | 24 | 2 1/2 | 4 7/8 | 4 7/8 | 1 13/32 | 15 5/8 | 10 7/8 | 1400 | 4.500 | 4 1/2 | 26 1/8 |

## Rod End Dimensions

| BORE | MM | KK | A | B -.001/ -.005 | C | F | LAF | NA | RD | V | WF | Y | XJ | ZB* |
|---|---|---|---|---|---|---|---|---|---|---|---|---|---|---|
| 10 | 4 1/2 | 3 1/4-12 | 4 1/2 | 5.249 | 1 | 1 15/16 | 7 7/16 | 4 3/8 | 8 1/4 | 1/4 | 2 15/16 | 4 3/4 | 13 3/8 | 16 11/32 |
| | 5 | 3 1/2-12 | 5 | 5.749 | 1 | 1 15/16 | 8 3/16 | 4 7/8 | 8 7/8 | 1/4 | 3 3/16 | 5 | 13 15/16 | 16 19/32 |
| | 5 1/2 | 4-12 | 5 1/2 | 6.249 | 1 | 1 15/16 | 8 11/16 | 5 3/8 | 9 3/8 | 1/4 | 3 3/16 | 5 | 13 5/8 | 16 19/32 |
| | 7 | 5-12 | 7 | 7.999 | 1 | 1 15/16 | 10 1/2 | 6 7/8 | 10 1/2 | 3/8 | 3 1/2 | 5 5/16 | 13 5/8 | 16 29/32 |
| 12 | 5 1/2 | 4-12 | 5 1/2 | 6.249 | 1 | 1 15/16 | 8 11/16 | 5 3/8 | 9 3/8 | 1/4 | 3 3/16 | 5 3/8 | 15 1/2 | 19 3/32 |
| | 7 | 5-12 | 7 | 7.999 | 1 | 1 15/16 | 10 1/2 | 6 7/8 | 10 1/2 | 3/8 | 3 1/2 | 5 11/16 | 16 5/16 | 19 13/32 |
| | 8 | 5 3/4-12 | 8 | 8.999 | 1 | 1 15/16 | 12 | 7 7/8 | 12 1/2 | 3/8 | 4 | 6 3/16 | 15 13/16 | 19 29/32 |
| 14 | 7 | 5-12 | 7 | 7.999 | 1 | 1 15/16 | 10 1/2 | 6 7/8 | 10 1/2 | 3/8 | 3 1/2 | 5 7/8 | 16 11/16 | 20 17/32 |
| | 8 | 5 3/4-12 | 8 | 8.999 | 1 | 1 15/16 | 12 | 7 7/8 | 12 1/2 | 3/8 | 4 | 6 3/8 | 17 11/16 | 21 1/32 |
| | 10 | 7 1/4-12 | 10 | 10.999 | 1 | 1 15/16 | 14 1/2 | 9 7/8 | 14 1/2 | 3/8 | 4 1/2 | 6 7/8 | 17 3/16 | 21 17/32 |

## Tie Rod Dimensions

| BORE | RA | RB | RC | TIE ROD THREAD |
|---|---|---|---|---|
| 10 | 5.291 | 3.775 | — | 1 1/8-12 |
| 12 | 6.270 | 4.555 | — | 1 1/4-12 |
| 14 | 7.485 | 6.143 | 4.409 | 1 1/4-12 |

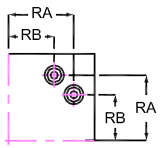


10" and 12" Bores

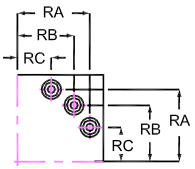


14" Bores

## Rod End Styles

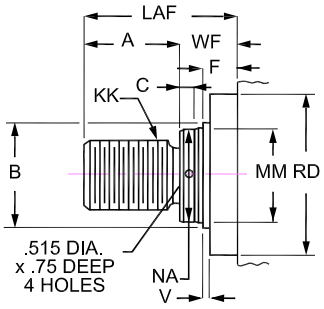


1
KK Male

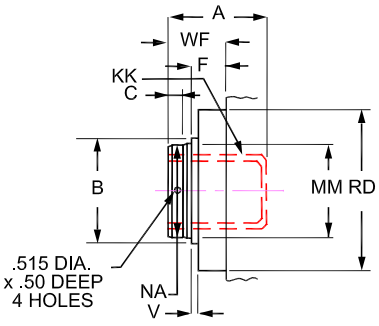


2
KK Female

## NFPA MT4 - Intermediate Fixed Trunnion

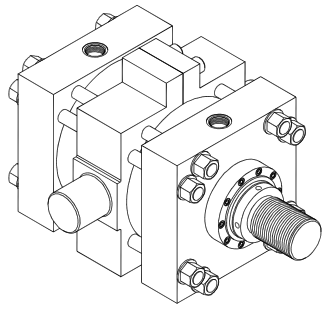

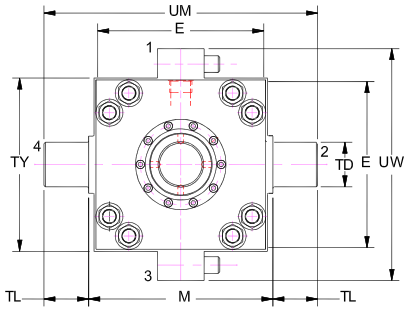


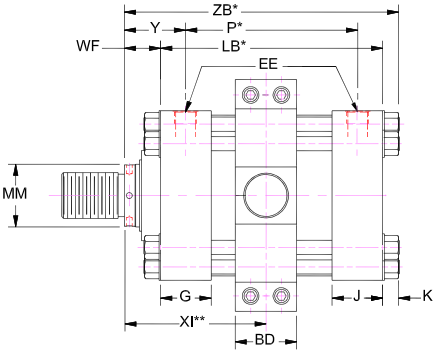


* Add stroke to starred dimension

** Dimension XI to be specified by customer

### Body Dimensions

| BORE | E | EE (SAE) | EE (NPTF) | G | J | K | LB* | P* | MAX PRESSURE PSI | TD -.000/ -.001 | TL | TM | TY | UM | UW |
|---|---|---|---|---|---|---|---|---|---|---|---|---|---|---|---|
| 10 | 12 5/8 | 24 | 2 | 3 11/16 | 3 11/16 | 1 9/32 | 12 1/8 | 8 1/2 | 1600 | 3.500 | 3 1/2 | 14 | 13 | 21 | 17 1/2 |
| 12 | 14 7/8 | 24 | 2 1/2 | 4 7/16 | 4 7/16 | 1 13/32 | 14 1/2 | 10 1/8 | 1500 | 4.000 | 4 | 16 1/2 | 15 1/2 | 24 1/2 | 20 3/4 |
| 14 | 17 1/8 | 24 | 2 1/2 | 4 7/8 | 4 7/8 | 1 13/32 | 15 5/8 | 10 7/8 | 1400 | 4.500 | 4 1/2 | 19 1/2 | 19 1/4 | 28 1/2 | 24 3/4 |

### Rod End Dimensions

| BORE | MM | KK | A | B -.001/ -.005 | C | F | LAF | NA | RD | V | WF | Y | ZB* |
|---|---|---|---|---|---|---|---|---|---|---|---|---|---|
| 10 | 4 1/2 | 3 1/4-12 | 4 1/2 | 5.249 | 1 | 1 15/16 | 7 7/16 | 4 3/8 | 8 1/4 | 1/4 | 2 15/16 | 4 3/4 | 16 11/32 |
| | 5 | 3 1/2-12 | 5 | 5.749 | 1 | 1 15/16 | 8 3/16 | 4 7/8 | 8 7/8 | 1/4 | 3 3/16 | 5 | 16 19/32 |
| | 5 1/2 | 4-12 | 5 1/2 | 6.249 | 1 | 1 15/16 | 8 11/16 | 5 3/8 | 9 3/8 | 1/4 | 3 3/16 | 5 | 16 19/32 |
| | 7 | 5-12 | 7 | 7.999 | 1 | 1 15/16 | 10 1/2 | 6 7/8 | 10 1/2 | 3/8 | 3 1/2 | 5 5/16 | 16 29/32 |
| 12 | 5 1/2 | 4-12 | 5 1/2 | 6.249 | 1 | 1 15/16 | 8 11/16 | 5 3/8 | 9 3/8 | 1/4 | 3 3/16 | 5 3/8 | 19 3/32 |
| | 7 | 5-12 | 7 | 7.999 | 1 | 1 15/16 | 10 1/2 | 6 7/8 | 10 1/2 | 3/8 | 3 1/2 | 5 11/16 | 19 13/32 |
| | 8 | 5 3/4-12 | 8 | 8.999 | 1 | 1 15/16 | 12 | 7 7/8 | 12 1/2 | 3/8 | 4 | 6 3/16 | 19 29/32 |
| 14 | 7 | 5-12 | 7 | 7.999 | 1 | 1 15/16 | 10 1/2 | 6 7/8 | 10 1/2 | 3/8 | 3 1/2 | 5 7/8 | 20 17/32 |
| | 8 | 5 3/4-12 | 8 | 8.999 | 1 | 1 15/16 | 12 | 7 7/8 | 12 1/2 | 3/8 | 4 | 6 3/8 | 21 1/32 |
| | 10 | 7 1/4-12 | 10 | 10.999 | 1 | 1 15/16 | 14 1/2 | 9 7/8 | 14 1/2 | 3/8 | 4 1/2 | 6 7/8 | 21 17/32 |

### Tie Rod Dimensions

| BORE | RA | RB | RC | TIE ROD THREAD |
|---|---|---|---|---|
| 10 | 5.291 | 3.775 | — | 1 1/8-12 |
| 12 | 6.270 | 4.555 | — | 1 1/4-12 |
| 14 | 7.485 | 6.143 | 4.409 | 1 1/4-12 |

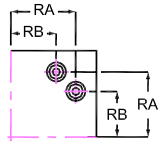


10" and 12" Bores

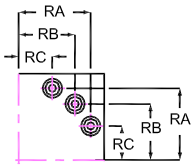


14" Bores

### Rod End Styles

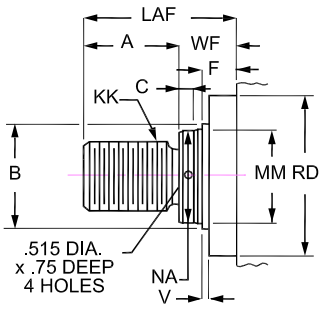


1
KK Male

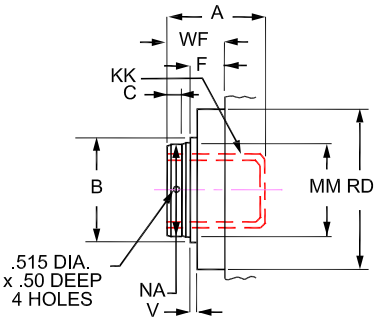


2
KK Female

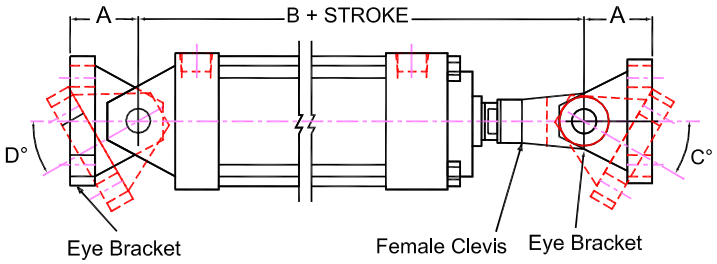


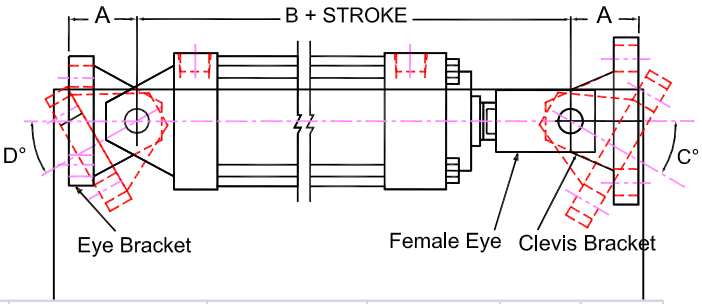


| BORE | A | B | Eye Bracket | Female Clevis | Clevis Bracket | Female Eye | Pivot Pin | C° | D° |
|---|---|---|---|---|---|---|---|---|---|
| 1 1/2 | 1 1/8 | 7 7/8 | EB -1003 | FC -1005 | CB -1003 | FE -1003 | PP -1003 | 90° | 60° |
| 2 | 1 7/8 | 9 5/8 | EB -1004 | FC -1008 | CB -1004 | FE -1004 | PP -1004 | 90° | 65° |
| 2 1/2 | 1 7/8 | 9 3/4 | EB -1004 | FC -1008 | CB -1005 | FE -1004 | PP -1004 | 90° | 65° |
| 3 1/4 | 2 3/8 | 11 3/4 | EB -1006 | FC -1011 | CB -1006 | FE -1006 | PP -1006 | 80° | 65° |
| 4 | 3 | 13 7/8 | EB -1008 | FC -1014 | CB -1008 | FE -1008 | PP -1008 | 90° | 70° |
| 5 | 3 3/8 | 15 | EB -1010 | FC -1016 | CB -1010 | FE -1010 | PP -1010 | 75° | 65° |
| 6 | 4 | 17 5/8 | EB -1012 | FC -1020 | CB -1012 | FE -1012 | PP -1012 | 75° | 65° |
| 7 | 4 | 20 1/4 | EB -1014 | FC -1024 | CB -1014 | FE -1014 | PP -1014 | 70° | 65° |
| 8 | 4 1/4 | 21 3/4 | EB -1016 | FC -1028 | CB -1016 | FE -1016 | PP -1016 | 70° | 65° |
| 10 | 5 11/16 | 27 9/16 | EB -1020 | FC -1036 | CB -1020 | FE -1020 | PP -1020 | 70° | 60° |
| 12 | 6 7/16 | 32 3/16 | EB -1024 | FC -1044 | CB -1024 | FE -1024 | PP -1024 | 65° | 60° |

## Female Clevis (FC)

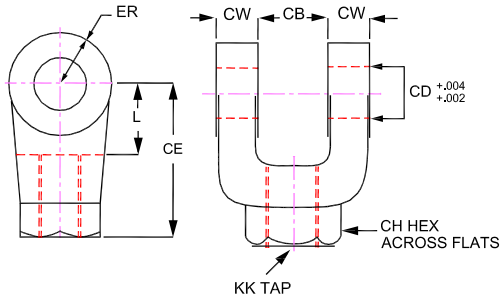


| Part No. | CB | CD | CE | CH | CW | ER | KK | L |
|---|---|---|---|---|---|---|---|---|
| FC -1005 | 3/4 | 1/2 | 1 1/2 | 7/8 | 1/2 | 1/2 | 7/16-20 | 3/4 |
| FC -1008 | 1 1/4 | 3/4 | 2 3/8 | 1 3/8 | 5/8 | 3/4 | 3/4-16 | 1 1/4 |
| FC -1011 | 1 1/2 | 1 | 3 1/8 | 1 5/8 | 3/4 | 1 | 1-14 | 1 1/2 |
| FC -1014 | 2 | 1 3/8 | 4 1/8 | 2 | 1 | 1 3/8 | 1 1/4-12 | 2 1/8 |
| FC -1016 | 2 1/2 | 1 3/4 | 4 1/2 | 2 3/8 | 1 1/4 | 1 3/4 | 1 1/2-12 | 2 1/4 |
| FC -1020 | 2 1/2 | 2 | 5 1/2 | 2 15/16 | 1 1/4 | 2 | 1 7/8-12 | 2 1/2 |
| FC -1024 | 3 | 2 1/2 | 6 1/2 | 3 1/2 | 1 1/2 | 2 1/2 | 2 1/4-12 | 3 |
| FC -1028 | 3 | 3 | 6 3/4 | 3 7/8 | 1 1/2 | 2 3/4 | 2 1/2-12 | 3 1/4 |
| FC -1036 | 4 | 3 1/2 | 8 1/2 | 5 | 2 | 3 1/2 | 3 1/4-12 | 4 |
| FC -1044 | 4 1/2 | 4 | 10 | 6 1/8 | 2 1/4 | 4 | 4 -12 | 4 1/2 |

## Pivot Pin (PP)

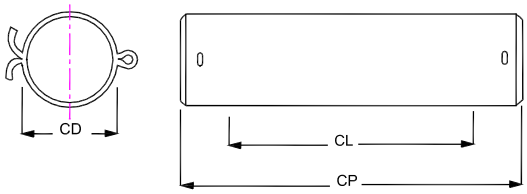


| Part No. | CD | CL | CP |
|---|---|---|---|
| PP -1003 | 1/2 | 1 3/4 | 2 3/8 |
| PP -1004 | 3/4 | 2 1/2 | 3 1/8 |
| PP -1006 | 1 | 3 | 3 3/4 |
| PP -1008 | 1 3/8 | 4 | 4 3/4 |
| PP -1010 | 1 3/4 | 5 | 6 1/32 |
| PP -1012 | 2 | 5 | 6 1/32 |
| PP -1014 | 2 1/2 | 6 | 7 1/32 |
| PP -1016 | 3 | 6 | 7 1/8 |
| PP -1020 | 3 1/2 | 8 | 9 5/8 |
| PP -1024 | 4 | 9 | 10 5/8 |

## Female Eye (FE)

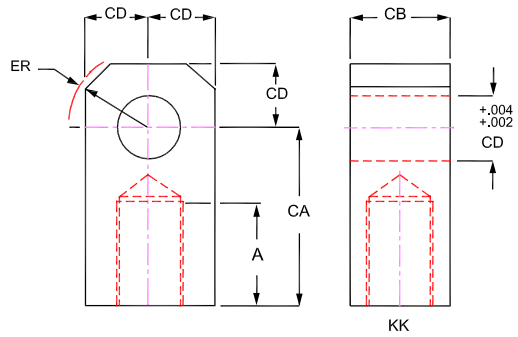


| Part No. | A | CA | CB | CD | ER | KK |
|---|---|---|---|---|---|---|
| FE-1002 | 3/4 | 1 1/2 | 7/16 | 7/16 | 19/32 | 5/16-24 |
| FE-1003 | 3/4 | 1 1/2 | 3/4 | 1/2 | 5/8 | 7/16-20 |
| FE-1004 | 1 1/8 | 2 1/16 | 1 1/4 | 3/4 | 7/8 | 3/4-16 |
| FE-1006 | 1 5/8 | 2 13/16 | 1 1/2 | 1 | 1 3/16 | 1-14 |
| FE-1008 | 2 | 3 7/16 | 2 | 1 3/8 | 1 9/16 | 1 1/4-12 |
| FE-1010 | 2 1/4 | 4 | 2 1/2 | 1 3/4 | 2 | 1 1/2-12 |
| FE-1012 | 3 | 5 | 2 1/2 | 2 | 2 1/4 | 1 7/8-12 |
| FE-1014 | 3 1/2 | 5 13/16 | 3 | 2 1/2 | 2 13/16 | 2 1/4-12 |
| FE-1016 | 3 1/2 | 6 1/8 | 3 | 3 | 3 1/4 | 2 1/2-12 |
| FE-1020 | 4 1/2 | 7 5/8 | 4 | 3 1/2 | 3 7/8 | 3 1/4-12 |
| FE-1024 | 5 1/2 | 9 1/8 | 4 1/2 | 4 | 4 7/16 | 4-12 |

## Eye Bracket (EB)

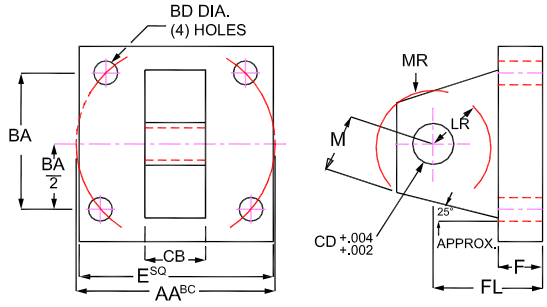


## Clevis Bracket (CB)

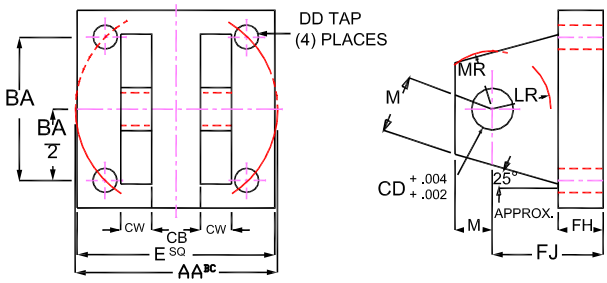


| Part No. | AA | BA | BD | CB | CD | E | F | FL | LR | M | MR |
|---|---|---|---|---|---|---|---|---|---|---|---|
| EB -1003 | 2.3 | 1 5/8 | 13/32 | 3/4 | 1/2 | 2 1/2 | 3/8 | 1 1/8 | 1/2 | 1/2 | 9/16 |
| EB -1004 | 3.6 | 2 9/16 | 17/32 | 1 1/4 | 3/4 | 3 1/2 | 5/8 | 1 7/8 | 1 | 3/4 | 1 1/16 |
| EB -1006 | 4.6 | 3 1/4 | 21/32 | 1 1/2 | 1 | 4 1/2 | 7/8 | 2 3/8 | 1 | 1 | 1 1/8 |
| EB -1008 | 5.4 | 3 13/16 | 21/32 | 2 | 1 3/8 | 5 | 7/8 | 3 | 1 1/8 | 1 3/8 | 1 3/4 |
| EB -1010 | 7.0 | 4 15/16 | 29/32 | 2 1/2 | 1 3/4 | 6 1/2 | 1 1/8 | 3 3/8 | 1 3/4 | 1 3/4 | 1 7/8 |
| EB -1012 | 8.1 | 5 3/4 | 1 1/32 | 2 1/2 | 2 | 7 1/2 | 1 1/2 | 4 | 2 | 2 | 2 1/8 |
| EB -1014 | 9.3 | 6 19/32 | 1 5/32 | 3 | 2 1/2 | 8 1/2 | 13/4 | 4 3/4 | 2 1/2 | 2 1/2 | 2 1/2 |
| EB -1016 | 10.6 | 7 1/2 | 1 9/32 | 3 | 3 | 9 1/2 | 2 | 5 1/4 | 2 3/4 | 2 3/4 | 2 3/4 |
| EB -1020 | 13.6 | 9 5/8 | 1 25/32 | 4 | 3 1/2 | 12 5/8 | 1 11/16 | 5 11/16 | 3 1/2 | 3 1/2 | 3 1/2 |
| EB -1024 | 16.2 | 11 1/2 | 2 1/32 | 4 1/2 | 4 | 14 7/8 | 1 15/16 | 6 7/16 | 3 7/8 | 4 | 4 |

| Part No. | AA | BA | CB | CD | CW | DD | E | FH | FJ | LR | M | MR |
|---|---|---|---|---|---|---|---|---|---|---|---|---|
| CB -1003 | 2.3 | 1 5/8 | 25/32 | 1/2 | 1/2 | 3/8-24 | 2 1/2 | 3/8 | 1 1/8 | 1/2 | 1/2 | 9/16 |
| CB -1004 | 2.9 | 2 1/16 | 1 9/32 | 3/4 | 5/8 | 1/2-20 | 3 | 5/8 | 1 7/8 | 1 | 3/4 | 1 1/16 |
| CB -1005 | 3.6 | 2 9/16 | 1 9/32 | 3/4 | 5/8 | 1/2-20 | 3 1/2 | 5/8 | 1 7/8 | 1 1/16 | 3/4 | 1 1/16 |
| CB -1006 | 4.6 | 3 1/4 | 1 17/32 | 1 | 3/4 | 5/8-18 | 4 1/2 | 3/4 | 2 1/4 | 1 1/4 | 1 | 1 1/8 |
| CB -1008 | 5.4 | 3 13/16 | 2 1/32 | 1 3/8 | 1 | 5/8-18 | 5 | 7/8 | 3 | 1 7/8 | 1 3/8 | 1 3/4 |
| CB -1010 | 7.0 | 4 15/16 | 2 17/32 | 1 3/4 | 1 1/4 | 7/8-14 | 6 1/2 | 7/8 | 3 1/8 | 2 | 1 3/4 | 1 7/8 |
| CB -1012 | 8.1 | 5 3/4 | 2 17/32 | 2 | 1 1/4 | 1-14 | 7 1/2 | 1 | 3 1/2 | 2 1/8 | 2 | 2 1/8 |
| CB -1014 | 9.3 | 6 19/32 | 3 1/32 | 2 1/2 | 1 1/2 | 1 1/8-12 | 8 1/2 | 1 | 4 | 2 5/8 | 2 1/2 | 2 1/2 |
| CB -1016 | 10.6 | 7 1/2 | 3 1/32 | 3 | 1 1/2 | 1 1/4-12 | 9 1/2 | 1 | 4 1/4 | 2 7/8 | 2 3/4 | 2 3/4 |
| CB -1020 | 13.6 | 9 5/8 | 4 1/16 | 3 1/2 | 2 | 1 3/4-12 | 12 5/8 | 1 11/16 | 5 11/16 | 3 5/8 | 3 1/2 | 3 1/2 |
| CB -1024 | 16.2 | 11 1/2 | 4 9/16 | 4 | 2 1/4 | 2-12 | 14 7/8 | 1 15/16 | 6 7/16 | 4 | 4 | 4 |

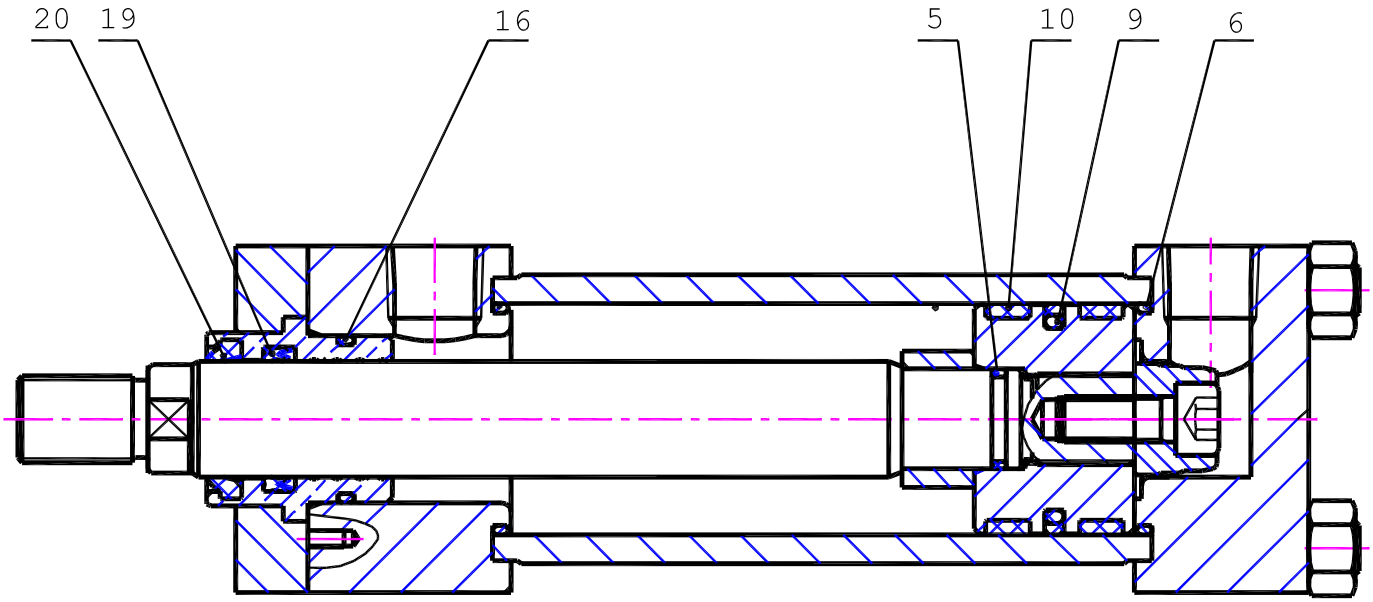


## Seal Parts Identification

| Part. No. | Description | Parker Seal Type |
|---|---|---|
| 20 | Rod Wiper | SHD |
| 19 | Rod Seal | BPP - B PolyPak |
| 10 | Wear Ring * | 0401 PDT |
| 16 | Rod Bushing O-Ring | 4300 568 |
| 6 | End Seal O-Ring (2) | 4300 568 |
| 9 | Piston Seal | OE |
| 5 | Piston O-Ring | 4300 568 |

* Part #10 QTY is depent on Bore Dia

| Bore Dia | QTY |
|---|---|
| 1 1/2 - 3 1/4 | 1 |
| 4 - 10 | 2 |
| 12 - 20 | 4 |

| MODEL NO | DESCRIPTION |
|---|---|
| SK-H01500063 | 1 1/2" BORE X 5/8" ROD SEAL KIT |
| SK-H01500100 | 1 1/2" BORE X 1" ROD SEAL KIT |
| SK-H02000100 | 2" BORE X 1" ROD SEAL KIT |
| SK-H02000138 | 2" BORE X 1 3/8" ROD SEAL KIT |
| SK-H02500100 | 2 1/2" BORE X 1" ROD SEAL KIT |
| SK-H02500138 | 2 1/2" BORE X 1 3/8" ROD SEAL KIT |
| SK-H02500175 | 2 1/2" BORE X 1 3/4" ROD SEAL KIT |
| SK-H03250138 | 3 1/4" BORE X 1 3/8" ROD SEAL KIT |
| SK-H03250175 | 3 1/4" BORE X 1 3/4" ROD SEAL KIT |
| SK-H03250200 | 3 1/4" BORE X 2" ROD SEAL KIT |
| SK-H04000175 | 4" BORE X 1 3/4" ROD SEAL KIT |
| SK-H04000200 | 4" BORE X 2" ROD SEAL KIT |
| SK-H04000250 | 4" BORE X 2 1/2" ROD SEAL KIT |

# TC Telescopic Cylinder Cross Reference Guide

| MODEL NO Pin Mount | PARKER NO Pin Mount | CUSTOM HOIST NO Pin Mount | CUSTOM HOIST OLD Pin Mount | CUSTOM HOIST OLD Pin Mount |
|---|---|---|---|---|
| **53-72TC-4630** | S53DC-66-72 | 53-4630-72 | 53-4592-72 | 53-892-72 |
| **53-84TC-4630** | S53DC-66-84 | 53-4630-84 | 53-4592-84 | 53-892-84 |
| **53-106TC-4630** | S53DC-66-106 | 53-4630-106 | 53-4592-106 | 53-892-106 |
| **53-128TC-4648** | S53DC-68-123 | 53-4648-128 | 53-4459-128 | 53-759-128 |
| **53-130TC-4649** | S53DC-65-126 | 53-4649-130 | 53-4531-130 | 53-831-130 |
| **63-84TC-4680** | S63DC-101-84 | 63-4680-84 | 63-4402-84 | 63-702-84 |
| **63-104TC-4680** | S63DC-101-104 | 63-4680-104 | 63-4402-104 | 63-702-104 |
| **63-108TC-4680** | S63DC-101-107 | 63-4680-108 | 63-4402-108 | 63-702-108 |
| **63-120TC-4680** | S63DC-101-120 | 63-4680-120 | 63-4402-120 | 63-702-120 |
| **63-126TC-4680** | S63DC-101-126 | 63-4680-126 | 63-4402-126 | 63-702-126 |
| **63-132TC-4680** | S63DC-101-132 | 63-4680-132 | 63-4402-132 | 63-702-132 |
| **63-140TC-4680** | S63DC-101-140 | 63-4680-140 | 63-4402-140 | 63-702-140 |
| **63-160TC-4680** | S63DC-101-160 | 63-4680-160 | 63-4402-160 | 63-702-160 |
| **64-135TC-4480** | S64DB-12-135 | 64-4480-135 | 64-4435-135 | 64-735-135 |
| **64-156TC-4480** | S64DB-12-156 | 64-4480-156 | 64-4435-156 | 64-735-156 |
| **64-156TC-4483** | S64DC-14-156 | 64-4483-156 | 64-4467-156 | 64-767-156 |
| **73-110TC-4569** | S73DC-66-110 | 73-4569-110 | 73-4500-110 | 73-800-110 |
| **73-118TC-4569** | S73DC-66-118 | 73-4569-118 | 73-4500-118 | 73-800-118 |
| **73-127TC-4569** | S73DC-66-127 | 73-4569-127 | 73-4500-127 | 73-800-127 |
| **73-142TC-4569** | S73DC-66-142 | 73-4569-142 | 73-4500-142 | 73-800-142 |
| **73-151TC-4569** | S73DC-66-151 | 73-4569-151 | 73-4500-151 | 73-800-151 |
| **74-120TC-4561** | S74DC-74-120 | 74-4561-120 | 74-4401-120 | 74-701-120 |
| **74-135TC-4561** | S74DC-74-135 | 74-4561-135 | 74-4401-135 | 74-701-135 |
| **74-140TC-4561** | S74DC-74-140 | 74-4561-140 | 74-4401-140 | 74-701-140 |
| **74-156TC-4561** | S74DC-74-156 | 74-4561-156 | 74-4401-156 | 74-401-156 |
| **74-161TC-4561** | S74DC-74-161 | 74-4561-161 | 74-4401-161 | 74-701-161 |
| **74-167TC-4561** | S74DC-74-167 | 74-4561-167 | 74-4401-167 | 74-701-167 |
| **74-180TC-4561** | S74DC-74-180 | 74-4561-180 | 74-4401-180 | 74-701-180 |
| **84-148TC-4502** | S84DC-66-148 | 84-4502-148 | 84-4466-148 | 84-466-148 |
| **84-156TC-4502** | S84DC-66-156 | 84-4502-156 | 84-4466-156 | 84-466-156 |
| **84-161TC-4502** | S66DC-66-161 | 84-4502-161 | 84-4466-161 | 84-466-161 |
| **84-170TC-4502** | S84DC-66-170 | 84-4502-170 | 84-4466-170 | 84-466-170 |
| **84-180TC-4502** | S84DC-66-180 | 84-4502-180 | 84-4466-180 | 84-466-180 |
| **85-170TC-4402** | S85DC-66-170 | 85-4402-170 | 85-4511-170 | 85-402-170 |
| **85-190TC-4402** | S85DC-66-190 | 85-4402-190 | 85-4511-190 | 85-402-190 |
| **85-200TC-4402** | S85DC-66-200 | 85-4402-200 | 85-4511-200 | 85-402-200 |
| **85-220TC-4402** | S85DC-66-220 | 85-4402-220 | 85-4511-220 | 85-402-220 |
| **85-235TC-4402** | S85DC-66-235 | 85-4402-235 | 85-4511-235 | 85-402-235 |
| **85-250TC-4402** | S85DC-66-250 | 85-4402-250 | 85-4511-250 | 85-402-250 |
| **85-265TC-4402** | S85DC-66-265 | 85-4512-265 | 85-4453-265 | 85-453-265 |
| **85-265TC-4510** | S85DC-66-265 | 85-4510-265 | 85-4466-265 | 85-466-265 |

# TC Telescopic Cylinder Cross Reference Guide

| MODEL NO Pin Mount | PARKER NO Pin Mount | CUSTOM HOIST NO Pin Mount | CUSTOM HOIST OLD Pin Mount | CUSTOM HOIST OLD Pin Mount |
|---|---|---|---|---|
| **85-280TC-4510** | S85DC-66-280 | 85-4510-280 | 85-4466-280 | 85-466-280 |
| **85-285TC-4510** | S85DC-66-285 | 85-4510-285 | 85-4466-285 | 85-466-285 |
| **95-220TC-4500** | S95DC-52-220 | 95-4500-220 | 95-4461-220 | 95-461-220 |
| **95-235TC-4500** | S95DC-52-235 | 95-4500-235 | 95-4461-235 | 95-461-235 |
| **95-250TC-4500** | S95DC-52-250 | 95-4500-250 | 95-4461-250 | 95-461-250 |
| **95-280TC-4500** | S95DC-52-280 | 95-4500-280 | 95-4461-280 | 95-461-280 |
| **95-300TC-4500** | S95DC-52-300 | 95-4500-300 | 95-4461-300 | 95-461-300 |

# TC Telescopic Cylinder Cross Reference Guide

| MODEL NO Trunnion Mount | PARKER NO Trunnion Mount | CUSTOM HOIST NO Trunnion Mount | CUSTOM HOIST OLD Trunnion Mount | CUSTOM HOIST OLD Trunnion Mount |
|---|---|---|---|---|
| **63-120TC-4689** | S63MB-9-120 | 63-4689-120 | 63-4582-120 | 63-4-120 |
| **63-140TC-4689** | S63MB-8-140 | 63-4689-140 | 63-4582-140 | 63-582-140 |
| **63-150TC-4689** | S63MB-8-150 | 63-4689-150 | 63-4582-150 | 63-4-150 |
| **63-168TC-4689** | S63MB-8-168 | 63-4689-168 | 63-4582-168 | 63-582-168T |
| **85-200TC-4526** | S85MC-48-200 | 85-4499-200 | 85-4499-200 | 85-463-200T |
| **85-220TC-4526** | S85MC-48-220 | 85-4526-220 | 85-4499-220 | 85-463-220T |
| **85-235TC-4526** | S85MC-48-235 | 85-4526-235 | 85-4499-235 | 85-463-235T |
| **85-250TC-4526** | S85MC-48-250 | 85-4526-250 | 85-4499-250 | 85-463-250T |
| **85-265TC-4526** | S85MC-48-265 | 85-4526-265 | 85-4499-265 | 85-463-265T |
| **85-280TC-4526** | S85MC-48-280 | 85-4526-280 | 85-4499-280 | 85-463-280T |

# TCMH Telescopic Cylinder Cross Reference Guide

| MODEL NO Trunnion Mount | MAILHOT NO Trunnion Mount | HYVA NO Trunnion Mount | MUNCIE NO Trunnion Mount | BINOTTO Trunnion Mount |
|---|---|---|---|---|
| **43-90TCMH-G3** | G3 90-4.25-3 | FC A4.5-3-91-K6-HC | 4.5-3-090-B00 | B3C 4.5-3-090-AV01 |
| **43-110TCMH-G3** | G3 110-4.25-3 | FC A4.5-3-110-K6-HC | 4.5-3-110-B00 | B3C 4.5-3-110-AV01 |
| **53-120TCMH-G3** | G3 120-5.0-3 | FC A5.5-3-119-K6-HC | 5.5-3-121-B00 | |
| **53-130TCMH-G3** | G3 130-5.0-3 | FC A5.5-3-127-K6-HC | | B3C 5.5-3-130-AV01 |
| **53-140TCMH-G3** | G3 140-5.0-3 | FC A5.5-3-137-K6-HC | 5.5-3-138-B00 | B3C 5.5-3-140-AV01 |
| **54-160TCMH-G3** | G3 160-5.0-4 | FC A5.5-4-158-K6-HC | | |
| **64-150TCMH-G3** | G3 150-5.7-4 | FC A6.5-4-146-K8-HC | 6.5-4-146-B00 | B3C 6.5-3-150-AV01 |
| **64-160TCMH-G3** | G3 160-5.7-4 | FC A6.5-4-158-K8-HC | 6.5-4-160-B00 | B3C 6.5-3-160-AV01 |
| **64-170TCMH-G3** | G3 170-5.7-4 | FC A6.5-4-170-K8-HC | 6.5-4-170-B00 | B3C 6.5-3-170-AV01 |
| **64-180TCMH-G3** | G3 180-5.7-4 | FC A6.5-4-183-K8-HC | 6.5-4-180-B00 | B3C 6.5-3-180-AV01 |

# CUSTOM CYLINDER ORDER FORM

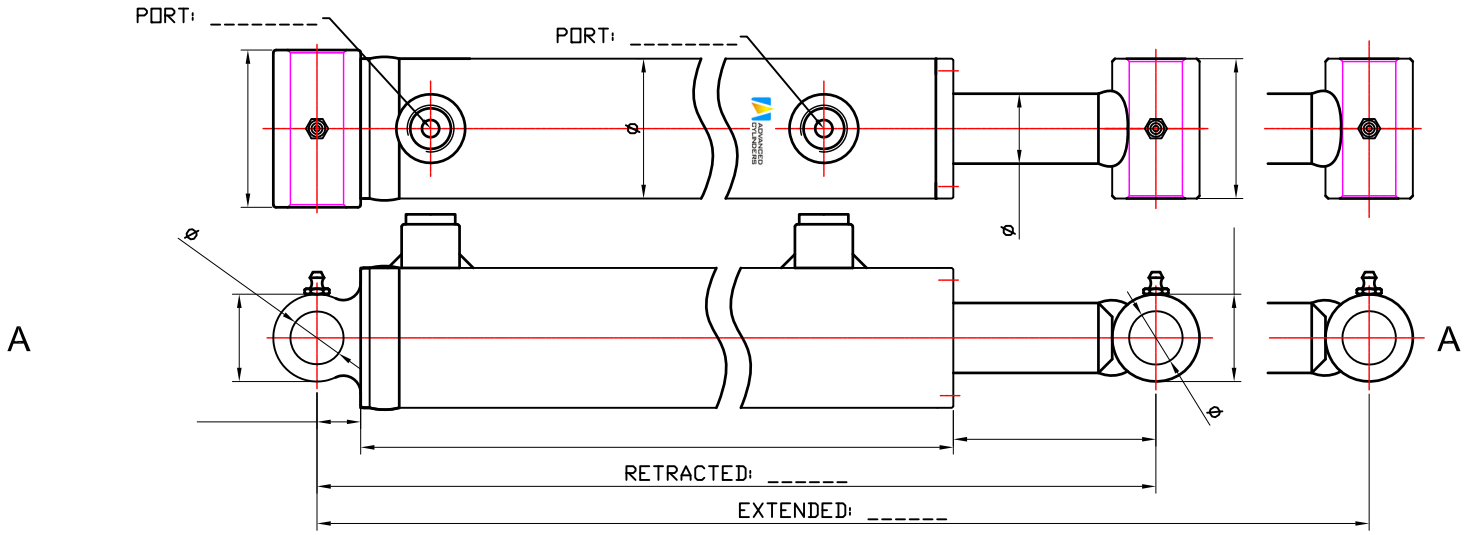


REAR

FRONT

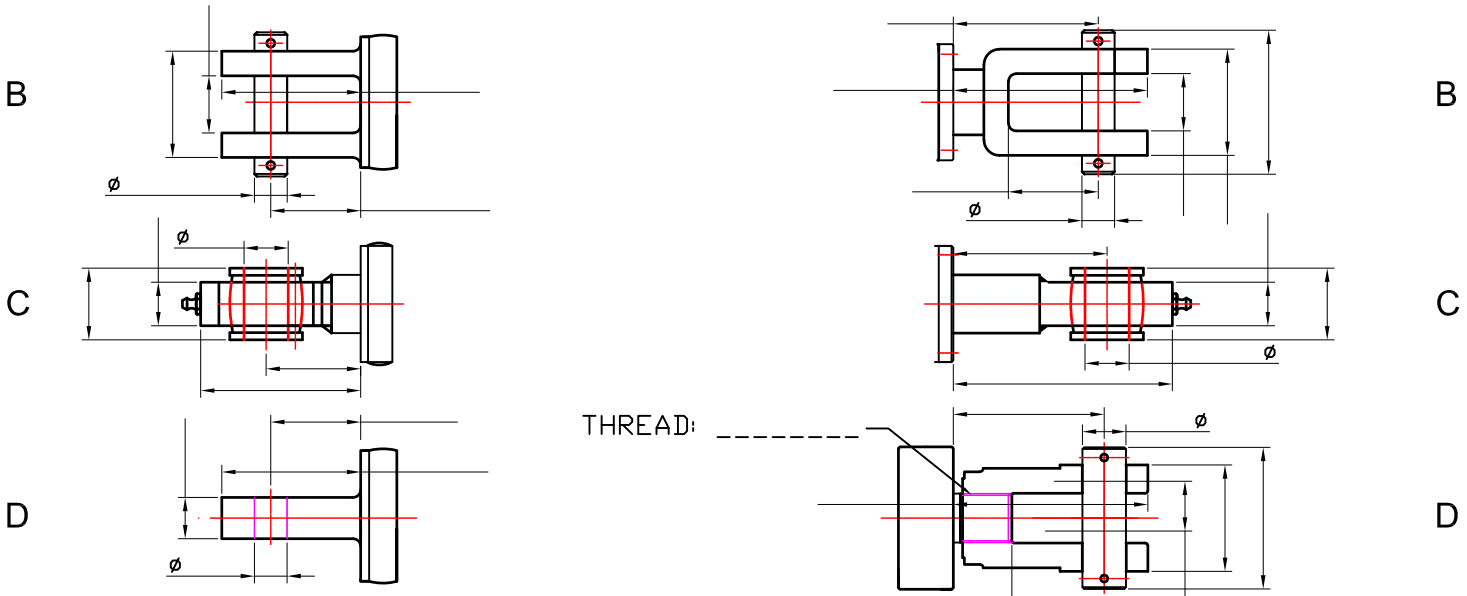


## PORT LOCATION

FRONT: ____
REAR: ____

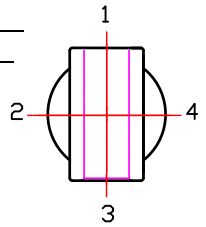


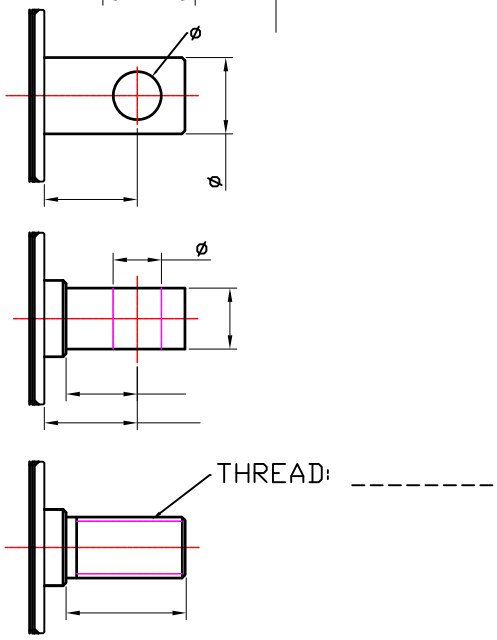


Always View Cylinder Through Rear Cap End

Cylinder Size: _____

Type - REAR: ____ FRONT: ____

QTY: _____ DATE: _____

Contact Name: _____

Company Name: _____

Email: _____

Phone: _____

# ADVANCED CYLINDERS WARRANTY

Advanced Cylinders Products are warranted for a period of one year from date of shipment to be free from defects in workmanship and material under correct use, normal operating conditions and proper applications. This warranty does not extend to goods damaged, or subjected to accident, abuse, or misuse after shipment, nor to goods altered or repaired by anyone other than authorized Advanced Cylinders representatives. This one year limited warranty is the only warranty extended by Advanced Cylinders in connection with any sale by Advanced Cylinders.

Advanced Cylinders' obligation upon breach of warranty shall be limited to replacing or repairing at our option, free of charge, but not including installation, dismantling, reassembling or any other charge, the particular product or part which inspection discloses to have been defective at time of shipment. Inspection may be at the place of installation and use, or at our company if returned to us at our expense including lowest transportation cost, is requested. Written notice of such defect shall be given by customer to Advanced Cylinders within 30 days after such defect(s) appear. Written permission for any warranty claim return must be first obtained from authorized Advanced Cylinders representatives. **All returns must be accompanied with a complete written explanation of claimed defects and the circumstances of operational failure.** Replacement of cylinders or parts thereof repaired under this warranty shall be warranted under the terms of this warranty for the remainder of the term of the original warranty or for a period of six months after such repair or replacement, whichever is longer. Upon expiration of the warranty, all of Advanced Cylinders' obligations hereunder shall terminate.

**IN NO EVENT SHALL ADVANCED CYLINDERS HAVE ANY LIABILITY FOR PAYMENT OF ANY CONSEQUENTIAL, INCIDENTAL, INDIRECT, SPECIAL OR TORT DAMAGES OF ANY KIND INCLUDING, BUT NOT LIMITED TO, ANY LOSS OF PROFITS,TO THE EXTENT EXCLUSION IS PERMITTED BY LAW.**

This warranty states our entire and exclusive liability and buyer's exclusive remedy for any claim of damages in connection with the sale or furnishing of Advanced Cylinders' products or parts, their design, suitability for use, installations or operation, or for any claimed defects therein.

ADVANCED CYLINDERS

# CUSTOM ENGINEERED CYLINDERS

Advanced Cylinders, LLC

13575 Yorba Ave.

Chino, CA 91710

Tel: (909)920-6437

Fax: (909)498-3712

Email: sales@advancedcylindersllc.com

www.advancedcylindersllc.com

Catalog AC1003 01/25